FIREARM SUICIDE AMONG OLDER ADULTS:
A SOCIOLOGICAL AUTOPSY

Greta Yoder Slater

Submitted to the faculty of the University Graduate School
in partial fulfillment of the requirements
for the degree
Doctor of Philosophy
in the School of Social Work
Indiana University

November 2005

Accepted by the Faculty Indiana University, in partial
fulfillment of the requirements for the degree of Doctor of Philosophy

Margaret E. Adamek, Ph.D., Chair

Doctoral
Committee

G. Roger Jarjoura, Ph.D.

John L. McIntosh, Ph.D.

Michael A. Patchner, Ph.D.

Robert F. Vernon, Ph.D.

August 8, 2005

DEDICATION

This work is dedicated to my family who supported, encouraged, challenged, and celebrated (with) me along the way. Thank you, Nick, Chase, Dad, Sonya, Heidi, Robin, Aly, Kim and Kathy. You mean the world to me. This work is also dedicated to my mom, Marilyn, who taught me the art of being a strong woman. ♥

Real courage doesn't always roar. It's the quiet voice at the end of the day saying, 'I'll try again tomorrow.' ~unknown

ACKNOWLEDGMENTS

I want to extend a special thanks to my family: Nick, Chase, Dad, Sonya, Heidi, Robin, Aly, Kim and Kathy. Thank you for all of those little and big things each of you have all done to support me and have made my work possible. I would like to thank my mentor, Margaret Adamek, for her leadership, prompting, tireless encouragement, and zest for gerontology. Thank you for your help with this project and so many others. I look forward to many productive years of scholarship together! I want to thank each of my committee members individually: Bob Vernon, Mike Patchner, John McIntosh, and Roger Jarjoura. Bob, I have enjoyed your sense of humor and the unique ability you have to help me gain perspective. Mike, I value your deep sense of integrity and the genuine way you relate to people within and outside the School of Social Work. Thank you for your leadership and optimism. John, I have immense respect for your expertise and advocacy for survivors of suicide. Your leadership in AAS and contribution to the field of suicidology is inspiring and humbling. Roger, thank you for helping to broaden my research and data analysis skills. I appreciate your guidance and expertise with model construction and testing. I also want to thank the Indiana University School of Medicine for the generous financial help provided me for two years. This support was invaluable in helping me complete the Ph.D. in a short time. I also would like to thank the Indiana University Graduate School for financial and technical support during my studies, with particular thanks to Deb Sullivan for help in preparing this manuscript.

PREFACE

On a global level, males over the age of 75 have the highest rates of suicide in nearly all industrialized countries (Jenkins & Kovess, 2002; Lester & Tallmer, 1994; McIntosh, Santos, Hubbard, & Overholser, 1994; Pearson, Conwell, Lindesay, Takahashi, & Caine, 1997). Suicide among older adults is a particular concern given the fact that adults age 65 and older have the highest suicide rates and are experiencing the largest population growth in recent history (Centers for Disease Control and Prevention, 2002; World Health Organization [WHO], 1996). Globally, the United States has a moderate rate of suicide, 11.9 per 100, 000, with rates in other nations ranging as high as 25 per 100,000 people in Hungary, Scandinavia, Switzerland, Germany, Austria, and Japan to 10 per 100, 000 people in the UK, Spain, Italy, Ireland, Egypt and the Netherlands (WHO, 2005). These statistics demonstrate that there is considerable variance in the suicide rates from country to country. There is also considerable variance from region to region and state to state. One key difference between the US and other nations, however, is the rate of gun suicide. The US firearm suicide rate is 1.25 times the next closest nation (Finland) and 200.8 times Japan's firearm suicide rate (Cukier, 1998).

In the United States, suicide is the 11th leading cause of death with firearms being the method of choice for 57 percent of those deaths for men and women combined (CDC, 2002). Between 1990 and 2000, over 181,500 people killed themselves with guns in the United States (CDC, 2002). This rate is 1.7 times the homicide rate in the US and significantly higher than most industrialized countries. The rate of suicide among adults over 65 is the highest of any other age group in the US, claiming the life of around 15 older adults on average per day—5,300 per year—73% of

whom use firearms (CDC, 2002). While firearm suicide is a significant public health problem, particularly among older adults, the research base is limited. Most of the evidence focuses exclusively on gun suicide and homicide among youth or the general population.

The purpose of this manuscript is to add to the theoretical and research literature regarding elder suicide and to propose a sociological autopsy method of studying suicide. There are nine chapters in this manuscript. Chapter I provides descriptive information about older adults, with particular attention to risk factors and special needs. Chapter II focuses on relevant theoretical approaches to suicidology and a critique of specific sociological research methods. Chapter III presents the sociological autopsy method of studying firearm suicide including the measurement of key indicators. Chapter IV outlines the development and validation of the Political Climate Scale. Chapter V covers the development and validation of the Economic Climate Scale and Status Integration measures. Chapter VI presents findings from the Gun Access Scale development and testing and specific findings relevant to the Gun Access. Chapter VII centers on the relationship of violence and guns and more specifically, the Gun Access Scale and the Violence Index. Finally, Chapter VIII outlines the results of the full model as it pertains to suicide overall, firearm suicide overall, elder suicide, and elder firearm suicide. Chapter IX includes discussion and synthesis of all the findings. Chapter IX also includes the limitations and implications of the present study along with suggestions for future research.

The objectives for this manuscript are:

1. To discuss the nature and extent of suicide and address differences in suicide risk factors across the lifespan;

2. To sort out the theoretical explanations of suicidal behavior, and review needs, issues, and policy considerations for suicidology;
3. To outline existing sociological approaches to suicidology and critique previous suicide research from a sociological perspective;
4. To present a research protocol for studying elder suicide from a sociological perspective and outline the methods used for the present study;
5. To delineate the relationship of state-level sociological factors (political climate, economic climate, and status integration) and state suicide rates;
6. To describe the relationship of state gun policy and suicide;
7. To discuss the overall model fit for the state-level data with suicide rates; and
8. To discuss the limitations, implications and future directions of the study.

ABSTRACT

Greta Yoder Slater

FIREARM SUICIDE AMONG OLDER ADULTS:
A SOCIOLOGICAL AUTOPSY

Background: Emile Durkheim (1897/1985) theorized that sociological variables (e.g., social, political, economic) are more helpful for understanding suicide than individual or psychological explanations. This study extends the previous sociological work on suicide by testing a theoretical model that includes economic, political, and social variables. The purpose of this study was the development and testing of a predictive model of firearm suicide among the general population and among older adults in the US.

Methods: Secondary data were collected from each state (N=50) and included divorce, gender, economic climate, elder economic climate, election results, gun access, and violence index. Political data were obtained from the Federal Election Commission and were coded as the percent voting for the Republican candidate in each of the last four Presidential elections. Economic climate and elder economic climate measures included five indicators of poverty. The gun access measure was a six-item Scale of gun laws indicating the leniency of gun control laws in each state. Violence data were obtained from Uniform Crime Reports which included homicide, rape, battery, and robbery. Maximum likelihood (ML) estimation was conducted using AMOS 5.0.

Results: The initial test of the structural model yielded a very good fit for the overall model $\chi^2(9, N=50) = 4.751$ (CMIN)$p = .855$, GFI=.973, NFI=.972, and

RMSEA=.000. Poverty, violence, partisanship, divorce, gender, and gun access had significant effects on suicide, explaining 76.2% of the variance in state suicide and gun suicide rates. Gun access had a significant, direct effect on suicide explaining more than 40% of the variance in state rates. Southern & mountain states with liberal gun policies had significantly higher rates of suicide and firearm suicide. The model was less helpful for explaining elder suicide, with 54% of the variance explained for elder suicide and elder gun suicide rates.

Implications: The sociological autopsy approach provides evidence to help inform policy making and practice in the US. Future research is needed to better understand age differences in gun access and to understand how elders acquire guns used in suicide. Comprehensive, theory-building research is one step toward a reduction in firearm suicide and development of comprehensive suicide prevention programs.

Margaret E. Adamek, Ph.D., Chair

TABLE OF CONTENTS

LIST OF TABLES

LIST OF FIGURES

Chapter I: INTRODUCTION

Epidemiology of Suicide

Overview

"Suicide" first entered the English language in 1651 A.D. (Stillion & McDowell, 1996) and has been defined several common ways in the epidemiological and practice literature. Shneidman (1985), the founder of the American Association of Suicidology, delineated the psychosocial elements that appear most often in suicide. He defined suicide as, "…a conscious act of self-induced annihilation, best understood as a multidimensional malaise in a needful individual who defines an issue for which the suicide is perceived as the best solution" (p. 203). Simply put, suicide is the intentional act of taking one's own life.

Other terms are common in suicide research, but they are not necessarily synonymous with suicide. For example, "parasuicide" is a term used to describe non-fatal suicide attempts (Kreitman, 1988; McIntosh et al., 1994; WHO, 1986) and this type of suicidal behavior is often studied using data from hospitalizations for serious injuries where there has been a suicide attempt (e.g., Scocco & De Leo, 2002; Shenassa, Catlin, & Buca, 2003). "Deliberate self-harm [DSH]" was used by Boyce and colleagues (2003) and Hawton and colleagues (1998) to include self-injury and self-poisoning with or without suicidal intent. Szanto and colleagues (2002) credit Farberow (1980) as the first to use the term "sub-intentional suicide," but it appears that Shneidman (1967) used it first ("subintentioned suicide") in his book *Essays in self-destruction* (p. 515). "Sub-intentional suicide" is a collection of covert behaviors such as refusing to eat, drink, take required medications, or to grossly neglect one's self (Shneidman, 2001). This class of behaviors is also called "intentional self-destructive

behaviors [ISDB]," "indirect self-destructive behavior [ISDB]," or "indirect life-threatening behavior [ILTB]." ILTB was the focus of several suicide studies in long-term care facilities (Osgood, 1982; Osgood, 1992; Osgood & Brandt, 1990; Osgood, Brandt, Lipman, 1991). Tadros and Salib (2000) used the term "fatal self-harm [FSH]" when describing fatal outcomes of self-harming behavior. This term can be used interchangeably with "suicide."

Extent

Suicide is most often represented as a rate per 100,000 people, which facilitates comparisons between demographic sub-groups and geographic regions of various population sizes. For example, Wyoming's suicide rate of 21.1 per 100,000 people was the highest in the US for the year 2002 and slightly more than twice the national average of 10.7 deaths per 100, 000 (CDC, 2004). The District of Columbia had the lowest rate: 5.4 per 100,000 and only 31 suicides. The highest overall rates of suicide in the US were in the mountain region (Nevada, New Mexico, Montana, Wyoming, Arizona, Colorado, Utah, and Idaho) with a rate of 16.9 deaths per 100,000 people. Seven of the eleven states with the highest suicide rates (two states were tied for 10th) were from the mountain region. The mid-Atlantic region (New York, Pennsylvania, and New Jersey) has the lowest regional rate: 7.8 deaths per 100,000 for the year 2002 (CDC, 2004).

Although older adults—people age 65 and older—comprised only 12.3 percent of the population in 2000, they accounted for 17.5 percent of the suicides (American Association of Suicidology [AAS], 2003). White men over age 85 have historically been at the greatest risk of suicide, with rates nearly 6 times the national rate overall (CDC, 2004). Regionally, rates of suicide among elders—age 65 and older—were

highest in the mountain region (Nevada, New Mexico, Montana, Wyoming, Arizona, Colorado, Utah, and Idaho) which averaged 23.9 elder suicides per 100,000 people (AAS, 2003; CDC, 2004). The region with the lowest elder suicide rate in 2000 was the mid-Atlantic region (New York, Pennsylvania, and New Jersey) with an average rate of 9.89 suicides per 100,000 people in 2000 (CDC, 2002).

Firearms are the most common method of suicide for both genders and all ages (CDC, 2004). Between 1980 and 1992, firearm-related suicides increased from 60 percent of suicides to 69 percent among elders (Adamek & Kaplan, 1996) and this upward trend has continued since that study was published, with the current level of 73 percent in 2000 (CDC, 2002). Although the suicide rate has remained stable for elder women since 1979, gun suicide increased 10 percent from 1980-1992 among women 65 and older, replacing poisoning as the most commonly chosen method of suicide among older women (Adamek & Kaplan, 1996). The regional differences for gun suicide and gun suicide among elders are distinct. The mountain region (Nevada, New Mexico, Montana, Wyoming, Arizona, Colorado, Utah, and Idaho) has the highest average gun suicide rate for both the general population and elder population. The average rate of gun suicide and elder gun suicide per 100,000 people in the mountain region was 9.67 and 18.91 respectively (CDC, 2004). Much like the regional rates for overall suicide and elder suicide, the mid-Atlantic region (New York, Pennsylvania, and New Jersey) had the lowest average gun suicide rate and elder gun suicide rate in 2000. New York, Pennsylvania, and New Jersey had an average of 3.45 gun suicides per 100,000 people in 2000 and an average of 5.73 gun suicides within the elder population in 2000 (CDC,

2002). Although the United States ranks 44th globally[1] for overall rates of suicide (WHO, 2005), the rates of gun suicide were higher in the US than any other country[2]. The firearm suicide rate in the US was 25 percent higher than Finland (2nd highest) and twice the rate of the 3rd highest country, Estonia (Cukier, 1998; United Nations, 1997).

A wide range of risk factors—age, gender, physical illness and disability, mental illness and mood disorders, losses (divorce, widowhood, and retirement specifically), and access to lethal means—have been associated with increased suicide risk among older adults. The most prominent risk factors associated with suicide in the epidemiological literature are outlined next.

Risk factors

Age. Shenassa and colleagues (2003) suggested that suicide rates increase with age, because of the increased likelihood of death following an attempt. Adults over 65 have an attempt to completion rate of 4:1, while the risk for younger people has been documented in the range of 8:1 to 300:1 (McIntosh et al., 1994; Szanto et al., 2002). This finding is similar to another study of suicide in which attempts to completion ratios are higher among adolescent or younger adult samples versus older adults (Pirkis, Burgess, & Dunt, 2000). It is likely that these rate differentials are due to the fact that older adults frequently have more heath problems, often live by themselves, avoid mental health interventions, are less likely to communicate suicidal ideation, take precautions to avoid discovery, choose more lethal means (i.e. firearms), and are not detected as quickly after the attempt (Conwell et al., 1998; Conwell & Duberstein, 2001; Szanto et al., 2002).

[1] The World Health Organization had data available for 97 countries as of June 2004. These data included both industrialized and developing countries.
[2] The United Nations Commission on Crime Prevention and Criminal Justice had firearm suicide data for 46 countries in March 1997. These data included both industrialized and developing countries.

In order to better understand causal factors involved in elder suicide, it is helpful to review similarities and differences between youth suicide and elder suicide. Tadros and Salib (2000) compared methods of fatal self-harm in 79 older adults and 200 younger adults in England by using coroners' reports from 1995-1998 to identify age-specific risk factors. The most common method of FSH among the older adult sample was poisoning by overdose and hanging was most common among younger people. Several methods of suicide differed significantly based on age: drowning, suffocation, carbon-monoxide poisoning, and jumping from heights. Tadros and Salib found that drowning was significantly more likely in the older adult sample than among younger adults, while suffocation, carbon-monoxide poisoning, and jumping from heights was significantly more likely method of death for the younger adults. It can be noted that there were no gun suicides during that time period, which reflects England's extremely low firearm suicide rate (Cukier, 1998; United Nations, 1997). Handguns are illegal in England and only four percent of Britons have other kinds of firearms in their households (Cukier, 1998).

Miller, Segal, and Coolidge (2000) also compared older and younger adults in their study of suicidal thinking and reasons for living among a sample of people in the US. They hypothesized that older and younger adults would have different reasons for living and that protective factors would be different due to living experiences, coping strategies, and socialization differences. They found no age differences in suicidal ideation for their sample of 164 people. This is contrary to findings by Duberstein, Conwell, Seidlitz, Lyness, Cox, and Caine (1999) who found that increasing age is associated with significantly less suicidal ideation in a sample of New Yorkers. Older adults do not often give warnings about suicide and seldom seek mental health

treatment (Duberstein et al., 1999). Unfortunately, not only are older adults less likely to seek treatment, but physicians are also less likely to diagnose and/or offer treatment to older depressed patients than younger ones (Uncapher, 2000; Uncapher & Arean, 2000). Hopelessness and depression are not normal parts of aging, yet there is a common misconception that these features go hand-in-hand with growing older.

Of the epidemiological studies of suicide, several important differences between older and younger suicides have been found. Age is directly associated with increased firearm suicide; younger people use guns significantly less often than older people. For example, Romero and Wintemute (2002) used CDC data files to examine trends in firearm suicide and homicide in the US between 1980 and 1998. The rate of firearm suicide increased with age, with the adolescent (aged 15-24) rate of gun suicides reaching 6.7 per 100,000 people and the rate among elders (aged 65+) more than double that of youth, or 14.6 deaths per 100, 000 people (Romero & Wintemute, 2002). They found that 57 percent of the suicides in 1998 were completed by firearm and these rates were relatively stable over time (from 1980-1998).

Shenassa, Catlin, and Buka (2003) compared mortality data of 10, 287 suicides and 37,352 nonfatal hospitalizations for attempted suicide in England from 1990-1997. They found that while protective factors associated with youth (good health and recuperative abilities, the lack of technical knowledge required for difficult suicide methods such as hanging, and decreased likelihood of being left alone for extended periods of time) moderated the lethality of parasuicide in non-firearm attempts, guns were found to have uniform lethality across the lifespan. Any event using a gun was 2.6 times [.95 CI, 2.1 to 3.1] more lethal than the next most common method (suffocation). There were significantly more poisonings—it was the most common method—but those

people did not die nearly as often as those who used a gun. Fatality was also significantly associated with older age—those who were older chose more lethal means and had higher rates of death. If a gun was used, it almost always ended in death, regardless of the person's age (Shenassa et al., 2003).

In a qualitative study comparing older and younger adults' thoughts about death, De Vries, Bluck, and Birren (1993) analyzed essays about death and dying written by 27 men and 27 women. The aim of the study was to see if qualitatively death was different than dying for these men and women. Thanatological (the study of death and dying) literature, particularly the "pop" materials on death and dying, has a tendency to discuss absence of fear as denial. These researchers were particularly interested in finding out what other alternatives to death anxiety there are in the lived experience of people. Structural analysis of these articles uncovered much more intense feelings about death than dying. Death was discussed in terms of self, other, and abstract and these same categories emerged from the study for dying as well. Younger and older adults had similar feelings about death and dying, but the middle aged people in the sample demonstrated elevated fears of death. They discussed being surprised by the findings, particularly finding no age differences between young adults and older adults. They concluded that a nearness to death is not the exclusive domain of older adults and that death anxiety is not an age-related construct (De Vries et al, 1993).

Gender. Numerous studies have demonstrated empirically that men have significantly higher risk of suicide than women and males 75 and older have the highest rates of suicide in nearly all industrialized countries (Conwell et al., 2002; Pearson et al., 1997; WHO, 2005). Worldwide, China is the only country where the suicide rates for women are higher than for men (WHO, 2005). One exception—the suicide rate of

elder Chinese men (60-84)—has remained high (Phillips, Li, & Zhang, 2002; WHO, 2005). Studies that controlled for gender found significant gender differences in parasuicidal behavior (Shenassa et al., 2003; Skegg, Nada-Raja, Dickson, Paul, & Williams, 2003; Welch, 2003). These studies have found that women of all ages make significantly more suicide attempts than men across the lifespan. Male gender is associated with higher rates of completion and use of highly lethal means, like firearms (Cantor & Baume, 1998). Romero and Wintemute (2002) found that men completed 87 percent of the firearm suicides in 1998 and had a firearm suicide rate more than 6 times the rate for women in the same year.

Conwell and colleagues (2002) found significant gender differences and age/gender interaction effects for their sample of 172 New Yorkers who ranged in age from 50-99 years old. Their psychological autopsy study focused on comparing completed suicides with randomly-selected community control subjects by age, gender, race, and county of residence. They found the risk of gun exposure higher for men than women (OR=2.57, p=.03) and that the risk for suicide was significantly elevated (OR=2.33; p=.01) by the presence of a gun in the home. The odds of suicide were even more elevated (χ^2=8.18; p=.004) for men with access to a gun when controlling for education and living arrangement (Conwell et al., 2002). One limitation of suicide research focusing on gender differences is that it is difficult to disentangle which effects result from gender or suicide method.

Physical illness. Physical health problems have been well-established as a risk factor for suicide, particularly among older adults (Chenowyth, 1981; Conwell, Rotenberg, & Caine, 1990; Goodwin, Marusic, & Hoven, 2003; Harris & Barraclough, 1994; Szanto et al., 2003). Several physical illnesses have been associated with high

risk of completed suicide: cancer, HIV/AIDS, Huntington's Disease, multiple sclerosis, peptic ulcer, renal disease, spinal cord injury, and systemic lupus erythematosus (Harris & Barraclough, 1994; Szanto et al., 2003). Chronic physical illness has been associated with higher risk of completed suicide when accompanied by depression (Harris & Barraclough, 1994; Szanto et al., 2003), but it has been suggested that the link is actually the comorbid depression or mental illness that increases the risk (Harris & Barraclough, 1994; McIntosh et al., 1994). While it is estimated that only 2-4 percent of terminally ill older adults kill themselves (Szanto et al., 2003), physical illness is more prevalent with advancing age and has been widely associated as an issue in suicide completions among older adults (McIntosh et al., 1994). A common component of physical illness, pain, has also been strongly implicated with the desire to end one's life (Breitbart, 1990; Fishbain, Goldberg, Rosomoff, & Rosomoff, 1991; Goldblum & Martin, 1999).

HIV/AIDS cases have risen faster for middle and older adults than for any other segment of the population (CDC, 2005). This is significant because risk of suicide among HIV-positive individuals has ranged from 7-36 times the risk of the general population (Cote, Biggar, & Dannenberg, 1992; Dannenberg, McNeil, Brundage, & Brookmeyer, 1996; Plott, Benton, & Winslade, 1989; Rajs, & Fugelstad, 1992; Starace, 1995). Diagnosis of HIV in late-life is often difficult because older adults often do not perceive themselves at risk for HIV and often their physicians do not either (Strombeck & Levy, 1998; Zelenetz & Eptstein, 1998). While research is limited about older HIV-positive adults' risk for suicide, there have been some studies that have included elders in the sample. Roy (2003) did a quasi-experimental study of suicide among HIV positive patients of all ages (N=149) to try to differentiate between HIV positive

patients who attempt and do not attempt suicide. Roy found that those who attempted suicide were more often female, had significantly higher rates of childhood trauma and had higher scores on the neuroticism measure (Eysenyk Personality Questionaire-EPQ). They also were significantly more likely to have had a depressive episode, at least one course of antidepressant medication, and a family history of suicidal behavior, which have been proven risk factors for suicide in numerous randomized clinical trials (Brown, Bruce, & Pearson, 2001; Kleepsies & Dettmer, 2000; Mulsant et al., 2000; Raue et al., 2001; Saz & Dewey, 2001; Szanto et al., 2002). Unfortunately, the age range of subjects in the sample was not reported, but the mean age was 42.1 for those who attempted and 46.3 for those who did not ($t(147)=4.2$, $p< .0001$).

In an ambitious study of death narratives, Holcomb, Neimeyer, and Moore (1993) analyzed the free-response narratives of 504 respondents who were asked to write about the meaning of death. Self-described constructivist researchers, these authors set out to identify the constructs most commonly associated with death and those least often associated. They found that respondents were twice as likely to evoke positive constructs of death as negative. Similar to de Vries and colleagues (1993), there were no discernable age differences in the ways that various age groups constructed death. Extremes in health status (excellent health vs. serious health problems) were associated with large mean differences in the MANOVA analysis of purposelessness and low understanding of death. Those in poor health described death as purposeless significantly more often and described having much less of an understanding of death than those in excellent health (Holcomb et al., 1993).

With regard to suicide, there was a significant correlation between past suicidal ideation or attempt and the construction of death narratives. Those who had past

histories of suicidality (n=206) were significantly less likely to talk about suicide in general terms, as something that happens to everyone than their counterparts (n=269). Those who had a past history of suicidal thinking or attempting had a more personal construction of death and talked about it from that point of view. One useful result of this study was the further refinement of a coding manual and framework of constructs related to death. The authors concluded by saying that more research was still needed to understand the complexities of death and how people make meaning from the experiences they have with facing death (Holcomb et al., 1993). The studies on death narratives (de Vries et al., 1993; Holcomb et al., 1993) is useful for understanding that age does not bring great understanding of death (Holcomb et al., 1993) or anxiety about death (de Vries et al., 1993). In work with older adults, it is helpful to remember that all people are unique and have particular ways of making meaning of their life experiences.

Mood disorders and mental illness. Depression has been well-established through several recent meta-analyses as a risk factor for suicide (Bartels et al., 2002; Kleepsies & Dettmer, 2000; Oei & Free, 1995; Szanto et al., 2002). Most of the practice research on suicide includes measures for screening depression and it is estimated that suicidal behavior is associated with depression in around 90 percent of the cases (Kaplan, Adamek, & Martin, 2002). In review of published studies of suicide, Duberstein and Conwell (1997) estimated that between 30-40 percent of the people who die by suicide have personality disorders or other Axis II diagnoses (Duberstein & Conwell, 1997). There are many well-developed instruments for assessing elder suicide risk and the often-associated diagnosis of depression. The *Beck Depression Inventory* (Beck, Ward, Mendleson, Mock, & Erbaugh, 1961), Center for Epidemiologic Studies-Depression Scale (Radloff, 1977), and *Geriatric Depression Scale* (Brink, Yesavage,

Lum, Heersema, Adey, & Rose, 1982; Yesavage, Brink, Rose, Lum, Huang, Adey, & Leirer, 1983) are the most widely used and offer highly valid and reliable results in assessing depression. The Geriatric Depression Scale (Brink et al., 1982; Yesavage et al., 1983) is available in 25 languages (Yesavage, 2003).

Kleepsies and Dettmer (2000) stressed the importance of viewing all risk factors within a framework of comprehensive suicide assessment and evidence-based treatments. Brown (n.d.) also provided a comprehensive review of assessment instruments and concluded that, "Most suicide assessment measures have been developed for children, adolescent, college student or young adult populations (see Goldston, 2000). In contrast, there are very few measures that have been specifically designed for elderly populations" (p.35). Reliable instruments to measure suicidality among older adults include: *Scale for Suicidal Ideation* (Beck, Kovacs, & Weissman, 1979), *Suicidal Ideation Screening Questionnaire* (Cooper-Patrick, Crum, & Ford, 1994), *Reasons for Living Inventory-Older Adult* (Edlestein, McKee, & Martin, 1999), and the *Suicide Assessment Checklist* (Rogers & Alexander, 1994). These instruments are reliable and valid for use in evidence-based practice with elders and have been validated with sub-groups of older adults (see Appendix A). Kleepsies and Dettmer noted several other high-suicide-risk features when presented with depression: comorbid alcoholism, insomnia, decreased concentration, anxiety, obsessive-compulsive features, and previous history of suicide attempts. Although comprehensive assessment and treatment of late-life depression is recommended for preventing suicides among older adults, there are some problems that have been outlined in the literature.

Barriers to treatment for late-life depression have been well-documented in the literature (American Psychiatric Association, 2003; Brown et al., 2001; Goldman,

Nielsen, & Champion, 1999; Kleepsies & Dettmer, 2000; Morrow-Howell, Becker-Kemppainen, & Lee, 1998; Mulsant et al., 2001; Szanto et al., 2002; Uncapher, 2000; Uncapher & Arean, 2000). Older adults often do not give warnings about suicide and seldom seek mental health treatment. Not only are older adults less likely to seek treatment, but physicians are less likely to offer treatment for depression to older patients and physicians are more likely to consider suicidal thoughts rational and normal (Uncapher, 2000; Uncapher & Arean, 2000). Sadly, Uncapher and Arean also found physicians to be less optimistic than psychiatrists and psychologists that they could help an older suicidal person (Uncapher & Arean, 2000), although physicians are much more likely to have elders on their caseload than either psychiatrists or psychologists, since elders frequently use general practitioners for all treatments, even mental health. The National Institute of Mental Health [NIMH] has been influential in reducing those barriers for older adults being treated in primary care through a large, multi-site randomized controlled trial, which warrants further discussion.

Prevention of Suicide in the Primary Care Elderly—Collaborative Trial (PROSPECT) is a multi-site collaborative research study funded by several National Institute of Mental Health (NIMH) grants. The aim of the study is to evaluate the effectiveness of a primary care intervention in preventing and reducing suicidal ideation and behavior, associated hopelessness, and depressive symptoms in a population based sample of older adults. There are 18 primary care practices involved in the study and they have been paired based on location (urban and suburban), and ethnic and racial characteristics of the population being served. This study is longitudinal and the data are collected at baseline, 4, 8, 12, and 24 months. Preliminary results suggest that the intervention has been effective, particularly the medication algorithm that has been

developed to guide best practices in primary care clinics (Mulsant et al., 2001). The key findings include a protocol or algorithm for the recommended SSRI's. This includes an "augmentation" strategy of supplementing with one prescription instead of the previous practice of switching medications altogether when the current medication is not demonstrating efficacy (Mulsant et al., 2001). The findings of the study are promising for reducing the risk of suicide among elders with a diagnosis of depression.

Losses: Retirement, widowhood, and divorce. International studies of suicide have also found that loss is associated with elevated risk of suicide among older adults. The WHO/EURO Multi-center study of suicidal behavior brought researchers together in 16 European centers to gather data and analyze findings of people over 65 who attempted suicide in those countries. The data were collected from 1989-1993 and represent the following countries: Italy, Australia, Denmark, The Netherlands, Norway, Switzerland, France, Spain, Sweden, Germany, and Hungary. Stockholm (Sweden), Pointoise (France), and Oxford (England) have the highest attempted suicide rates. In most places the older adults who attempted were widowers, living alone, and selected drug ingestion methods. Suicidal behavior increased with age and the suicide rates increased as well. As the respondents got older, they attempted and completed more suicides (De Leo et al., 2001).

It has also been theorized that men have higher rates of suicide because each gender differs in how they disengage from society. Men may suffer a greater loss of social roles, because they often occupy formal places of status in the society and have more difficulty adjusting to the loss of status and therefore disengage prematurely—by killing themselves. For example, nearly 90 percent of Caucasian and Hispanic men, and 80 percent of African American men were participating in the labor force between ages

50-54 (Hobbs and Damon, 1996), but the proportion steadily decreases with age—ten percent of the oldest old are still working by the time they reach 85. This change in status has been theorized as a reason for the elevated risk of suicide among elder Caucasian men. Elder women participate slightly less often in employment, with 68 percent of Caucasian and African American women and 58 percent of Hispanic women in the workforce between the ages of 50-54. This rate declines gradually with age, with between 4-6 percent of oldest-old women still working by age 80 (Hobbs & Damon, 1996). This poses a less dramatic shift in status for elder women.

Retirement, by choice or necessity, has also been associated with elevated suicidal ideation. Two studies of voluntary and involuntary retirement by Peretti and Wilson tested this idea (1978-1979). They measured emotional stability, involvement in social relationships, and type of retirement—voluntary or involuntary—were measured among 140 Chicago residents. People who had their emotional needs met through social relationships and had a high degree of emotional stability did not consider suicide nearly as often as those who were isolated and emotionally labile—regardless of the type of retirement. The durability of social relationships and emotional stability seem to be buffers for life stressors, decreasing the risk of suicide among these older adult men (Paretti & Wilson, 1978-1979). Shepard and Barraclough (1980) did not find significant differences between retired and employed matched controls for completed suicides (N=150). However, when the time factor was included, they found that abrupt retirements were characteristic of completed suicides in their sample. Lester (1988) presented the idea that role strain caused by women being in the workforce might be creating higher rates of suicide among men. He wrote, “On the other hand, it may be that the participation of females in the labor force creates additional stress for men (both

those in the labor force competing with the females and those married to the working females), thereby increasing their suicide rate" (p. 12).

Divorced, widowed, and single elders have an elevated risk of suicide (Luoma, & Pearson, 2002; Kaprio, Koskenvuo, & Rita, 1987; McIntosh et al., 1994; Trovato, 1991). As age increases, rates of widowhood increase steadily, with 82 percent of oldest-old women (over 85) being without a spouse (Quadagno, 1999). The rate of widowhood is 18 percent among old-old men, because wives generally outlive their husbands and men tend to remarry. Trovato (1991) found that the transition from single or widowed to married had a significant protective effect for men in the reduction of suicide risk. Several hypotheses about marital status were tested (widowhood, divorce, and marriage) using longitudinal aggregate data from Canadian suicides from 1951-1981. Marriage had demonstrated reduction in risk for both men and women (although more pronounced for men) when compared to divorced and widowed elders (Trovato, 1991). This is consistent with earlier findings by Kreitman (1988) and Smith and colleagues (1988) that marriage is a protective factor for suicide. Making an even greater case of increased suicide risk after bereavement was a Finnish study of 95,647 widowed persons (Kaprio et al, 1987). They analyzed the death certificates occurring in 1972-1976 and found that suicides were significantly more likely in the 6 months immediately following the death of a spouse. Kaprio and colleagues (1987) also found that the risk was high for both men and women, but markedly higher for men. Given all the risk factors outlined in this section, the one of most interest for this study is access to lethal means, which will be covered briefly in the next section.

Access to lethal means. Numerous studies link access to lethal means, like firearms, to higher rates of suicide (Conwell et al., 2002; Cukier, 1998; Cutright &

Fernquist, 2000; Miller, Arazel, & Hemenway, 2002; Romero & Wintemute, 2002; Kellerman et al., 1992; Killias, van Kesteren, & Rindlisbacher, 2001; Shenassa et al., 2003; Wiebe, 2003). Internationally, the UK has a low percentage of households with guns (four percent) and a suicide rate of 0.3 per 100,000 people (Cukier, 1998). There were marked differences between Canada, the UK, and the United States with regard to gun ownership—40 percent of US households own guns as opposed to 4 percent and 26 percent in the UK and Canada, respectively (Cukier, 1998). The firearm suicide rates demonstrated a similar pattern; there were twice as many firearm suicides in the US, as in the UK and Canada combined. Despite the fact that US and Canadian suicide rates are similar overall, the firearm suicide rate in the US is twice the Canadian rate (7.23 per 100,000 and 3.35 per 100,000 respectively) and the proportion of homes with guns in the US is almost twice the Canadian percentage (Cukier, 1998). In England, most handguns were outlawed in 1996 (Graduate Institute of International Studies, 2005; Upson, Povey, & Gray, 2004) and since then, violent crime has decreased by 38 percent (Upson et al., 2004). While this hypothesis warrants further investigation, it appears likely that household ownership is associated with gun suicide in the US, Canada, and UK.

Most international and US American studies of firearm suicide are case-controlled, epidemiological studies using population-based aggregate measures. Findings from many of these studies point to increased suicide death when a gun is available, but there is a lack of consistent measurement in order to compare effects across studies. These studies have tested the gun access hypothesis for the general population, rather than among certain high risk groups like older adults (Cutright & Fernquist, 2000; Romero & Wintemute, 2002; Kellerman et al., 1992; Shenassa et al.,

2003; Wiebe, 2003). Several studies have made international comparisons of gun access and suicide rates (and/or homicide rates) for general populations (Cukier, 1998; Killias, et al., 2001; United Nations, 1997), or for women specifically (Kester,1988; Miller, et al., 2002). In one study about older adults specifically, Kaplan, Adamek, and Rhodes (1998) surveyed health care providers for their understanding about elder suicide by firearm in Illinois and found gaps in professionals' knowledge of elder suicide by guns.

In one of the few case-control studies of firearm access and elder suicide, Conwell and colleagues (2002) used the psychological autopsy method to examine the suicide deaths of 86 victims age 50 and older. They found that, even after controlling for psychiatric illness, the presence of a handgun in the home was associated with increased risk for suicide. In addition, handguns posed a higher risk than long guns or rifles and the risk was much greater for elder men than elder women (Conwell et al., 2002). While the data suggest that suicide risk increases with access to lethal means, there is still a need for a clearer understanding of the connection between gun policy, firearm access, and elder suicide. Access to a firearm may be the aggravating factor differentiating attempts from completions when there are other high-risk circumstances like isolation, retirement stress, and depression.

Shenassa and colleagues (2003) echoed this call for more policy research and were bold about recommendations for reducing firearm death. They studied the mortality data from 10,287 suicides and the records of 37,352 nonfatal hospitalizations for attempted suicide in England from 1990-1997. While the main findings of the study have been reviewed in the age risk factor section, it is important to note the strong recommendations they had for restriction of lethal means. Shenassa and colleagues recommended limiting access through legislative, judicial, and community-based

approaches. It is not clear whether this approach would work in the US, since the UK already has a restrictive environment and culture that supports these types of interventions. More research is needed to help inform decision-making in the United States. They concluded by writing, “Fairly simple measures can be taken to limit access to firearms, particularly among minors. …Clearly, the most effective preventative measure is the removal of firearms, particularly handguns, from the environment… Moreover, to the extent that changes in the social milieu are lasting, reductions in the availability of firearms can also lower the suicide mortality of future generations” (p. 125). The British Medical Association [BMA], which published the research, has formal policies about the dangers of gun ownership and regularly publishes studies with strong recommendations about limiting access (BMA, 2000). The BMA recommends against physicians co-signing applications for their patients to own a gun. “Where the applicant is a patient, doctors are advised not to support firearm applications unless they believe that they have sufficient knowledge about an individual to justify a judgment that the individual could safely possess and control such a firearm. The occasions when this is so will be rare” (BMA, 2004, ¶ 2).

In one of the rare practice-based studies of firearms and suicide, Sherman, et al. (2001) demonstrated the efficacy of a multi-disciplinary Firearms Risk Management (FRM) program with suicidal adults (N=46). In addition to tracking gun availability using a *firearms flow sheet,* the social worker took several steps to neutralize the risk of the patient using a firearm to die by suicide upon discharge. These steps included contacting the patient’s family and case manager, as well as law-enforcement officials. The social worker provided gun-risk education and worked with families to remove the gun from the home. The multidisciplinary team provided ongoing consultation and

evaluation. Neutralization of the risk of firearm use was stable for 89 percent of the sample at 24 months. In other words, only 5 of 46 patients threatened the use of a gun or had access to a firearm following the intervention. Though not yet tested with older adults, this model offers a promising direction for the reduction of firearm suicide in late-life. In addition to understanding specific risk factors, it is important to understand the broader theoretical explanations for suicide. The following section addresses theoretical explanations for suicide among elders and the general population.

Chapter II: Theoretical Approaches to Suicidology

Theories of Suicide

Psychological theories

Causal theories of suicide are complex and often incomplete. Theorists propose causal factors that range from individual to societal and include a wide range of influences such as a chemical imbalance, personality type, attachment problems, substance dependency, religion, poverty, and social policy causes. Much of the research literature has focused on the causal practice theories from various psychological theory perspectives. Clearly, psychological research is the prevailing paradigm in the suicidology literature both within the United States and around the world. Stillion and McDowell's book (1996), *Suicide across the Life Span*, provides a philosophical discussion of suicide by highlighting the various perspectives of western philosophers such as Socrates, Thomas Aquinas, Hume, Kierkegaard, and others. Both sociological and psychological theories can be traced to these philosophers' influence on the modern theories of suicide. Stillion and McDowell (1996) go on to identify the following causes of suicide: an under-regulating superego or defense mechanism, learned helplessness, a series of unmet needs, thwarted development, irrational thoughts, chemical imbalance, or attachment problems (Stillion & McDowell, 1996). McIntosh and colleagues (1996) identify the main psychological theories of suicide including psychoanalytic (Achté, 1988; Adler, 1968; Freud, 1963; see also Litman, 1967 for a review of Freud; Kastenbaum & Aisenberg, 1972; Menninger, 1938; Shneidman; 1985), behavioral (Beck, Rush, Shaw, & Emery, 1979; Jerger, 1979; Seligman, 1975), personal construct theory (Kelly, 1955, 1961; Hughes& Neimeyer, 1990; Neimeyer, 1983), and the cubic model of suicide (Shneidman, 1987).

Epistemology and evidence: Psychological approaches. In most social sciences, there rages a long-standing debate about "truth" and the "evidence" a particular epistemological perspective brings to the research table. Psychological theorists are actively involved in this debate as well. The discussion in this section focuses on the evidence base for particular epistemic paradigms among the psychological theories. Some see epistemological positions along a continuum, as in social constructionism and constructivism, where truth and evidence are socially created or individualized and fluid. Rogers (2001) presents an existential-constructivist model of suicide. McBee-Strayer and Rogers (2002) have followed this conceptual work with empirical testing of suicide from this epistemological perspective. The model followed a "hybrid of existential theory as described by Yalom (1980) and critical constructivism as described by Mahoney (1991) and Neimeyer and Mahoney (1995)" (p. 273). The study focused on stressors and their relationship to fundamental constructions of the self, others, relationships, and worldview. The outcome measure was self-reported suicidal behavior. Interestingly, factor analysis methods were chosen to make sense of the data, so the case could be made that the design was not purely constructivist. One could argue that the use of statistics, such as factor analysis, is not suitable for constructivist designs, because generalizations made from mathematical models are not relevant to the individual's experience of suicide, which is a unique construction for each individual. Nonetheless, the study found that relationships between individual constructions (of self, others, relationships, and worldview) and environmental challenges could not be conducted as planned. Poor performance on the *Reasons for Living Inventory* (Osman, Jones, & Osman, 1991) confounded the analysis and left these research questions unanswered in this study.

Fishman (2000) discusses “efficacy” versus “effectiveness” research in clinical disciplines and provides evidence for a new *pragmatic psychology*. Efficacy research, according to Fishman, is empirical testing of clinical practice that follows a manualized treatment protocol in which all of the therapeutic goals are clearly defined (often in advance—based on best practice guidelines for a particular diagnosis), measured, and progress is systematically evaluated. Efficacy research attempts to be as close to laboratory testing as possible in the social sciences and the goal is a clearly controlled social experiment, similar to clinical research in the physical and natural sciences. Effectiveness research is a practical, patient-centered treatment and research approach that has a more fluid definition of fidelity to the treatment protocol. Fishman argues that manualized treatment protocols in the strict sense of empirically supported treatments (EST) are designed for high internal validity but for little generalization to diverse populations or multiple presenting problems and diagnoses. Effectiveness research, by contrast, has high external validity, but low internal validity due to multiple confounding factors, such as patient-chosen goals. Finally, he presents an argument for yet another hybrid that falls within the positivistic realm of epistemology (Fishman, 2000).

At the extreme in this debate over which epistemology is the best (that is, it provides the most “evidence”) among practice approaches, are Grove and Meehl (1996) who maintain that the mechanical method is “almost invariably equal to or superior than the clinical method” (p. 293). These authors conducted a meta-analysis of decision-making in clinical practice and sampled all articles from the large literature researching clinical prediction in practice. They included all studies that listed at least one clinical prediction and one mechanical/mathematical prediction of treatment outcome in the

same study. They found 136 studies that met their criteria and this produced 617 distinct comparisons between math and mind (my reduction, not theirs). For each of these comparisons, they set up a numerical scheme (1=yes, 2=maybe, 3=no) for correctly predicting the outcome. Further, they allowed cases where the clinician had more information than the mathematician, but not the other way around. They wanted the burden of proof to weigh with the actuary, rather than the clinician.

They found the mechanical method was significantly better more often than clinical prediction. The article concluded by presenting cases and evidence for the predictive power of math and rebuttals for commonly argued sides of the debate. Both of the authors are self-proclaimed "proactuarial psychologists" and were not advocating mechanization of therapy itself or the relationship-building process. Rather, they recommended that clinicians who have a particular need for predictive judgments in their work (forensic psychologists, judges, probation officers, sexual offender therapists, and the like) use computer programs or some kind of actuarial table to help them make probability-based decisions. The mathematical models had significantly less false positives and false negatives than the clinicians, which added to their argument of the superiority of math versus clinical judgment. Overall, this article is thought provoking and useful for understanding the clinical/algorithmic debate about the accuracy of clinical judgment and standards of evidence needed in mental health treatment.

In summary, there are many approaches to "evidence" and many believe that hybrids are best for actual practice (Fishman, 2000; Mahoney, 1991; McBee-Strayer & Rogers, 2002; Neimeyer & Mahoney, 1995; Rogers, 2001). It seems that both learning the details of an individual's experience with suicide and the ability to make

generalizations and predictions about suicidal behavior are crucial for building a comprehensive theory of suicide that is relevant for practice.

Sociological theories

Sociologists also have developed theories of suicide that are crucial for research. In his seminal work on suicide called, *Le Suicide: 'Etude de Sociologie (*trans. *Suicide: A sociological study),* master theorist Emile Durkheim (1897/1985) posited that sociological variables (e.g., culture, social cohesion, and governmental control) are more helpful for understanding suicide than individual or psychological ones. He wrote:

> The sociologist studies causes which affect not the isolated individual, but the group. Therefore among the factors of suicide, the only ones which concern him (sic) are those which affect society as a whole. The suicide rate is the product of those factors. This is why we must confine our attention to them. (p. 96)

Using official European statistics and epidemiological sampling methods, Durkheim classified four main types of suicide—egoistic, altruistic, anomistic, and fatalistic. Suicide, he theorized, was caused by individuals' enmeshment or detachment from society—level of social cohesion. Extremes in political regulation, like dictatorships or anarchies, also cause suicide according to Durkheim (Alexander, 1988; Giddens, 1986; Poggi, 2000; Stedman Jones, 2001; Stillion & McDowell, 1996; Thompson, 1985). For clarification, Durkheim's four types of suicide will be explained in more detail and the implications for modern suicide research from a sociological perspective.

In a nutshell, a disconnection between a person and the social environment causes egoistic suicide. It is theorized that when a person does not have enough connection in their relationships with family, friends, and/or community members, they suicide. The individual becomes estranged from social life and suffers from an excess of individualism (Taylor, 1982). Lester and Yang (1992) found that social integration was

the strongest correlate of elderly suicide rates in various nations including the US Further evidence of this is demonstrated by the high rates of suicide among divorced and widowed elders (Stillion & McDowell, 1996; McIntosh et al., 1994, Stack, 1990b). At the other extreme of social cohesion, Durkheim hypothesized that altruistic suicide results from an over-identification or enmeshment with one's community, religious institution, school, family or country. Suicide bombers or martyrs are examples of this kind of suicide, because the person chooses to give up their body for the "good of the cause." One example of altruistic suicide is the Irish hunger strike during *The Troubles*. Irish activist Bobby Sands chose to starve himself in 1981 as a political protest on behalf of the Irish people (Beresford, 1987; Gould, 1981). His life was not worth living, in his estimation, without an Irish Republic free from British rule as well as equal rights for his countrymen and women.

Durkheim's third type of suicide is anomic—a lack of self-regulation due to a disillusionment, uncertainty, or apathy about one's roles in the political system and a lack of social norms to govern behavior. He hypothesized that overly permissive governments or anarchies cause people to feel directionless and void of purpose in the larger society. In addition, Durkheim and followers have used the idea of anomie to criticize modernity and the excesses of industrialization. Modern sociologists differ in their interpretation of anomie theory. European intellectuals like Bernberg (2002) tend to follow a more strictly Durkheimian critique of the culture. Such extensions as Institutional-anomie theory have been used to explain suicide and deviance (Bernberg, 2002). Modernity and industrialization have influenced a pathologic change in social structure, causing a decline in the welfare state (i.e., we no longer want to take care of

those who cannot meet their own needs in our society), a deregulation of the market economy (i.e., favoring greed), and an increase in crime and deviance (Bernberg, 2002).

US intellectuals have tended to steer clear of the social structure critique inherent in Durkheim's original anomie theory in favor of a more pragmatic perspective. Competition and the free market economy associated with capitalism are valued in the United States. Attempts to socialize the system are often met with serious resistance, so US American theorists have chosen to interpret Durkheim's anomie as a lack of means to pursue culturally sanctioned goals (i.e., capitalism), rather than as a flaw in the system or structure itself. The problem is not with structural inequality, but inequality in opportunity. While most US Americans intellectuals who follow Durkheim would describe anomic suicide as being caused by the frustration of not achieving the American Dream and not having the emotional, political, economic, or social capital to succeed, the European interpretation of anomie theory focuses on a flaw in the system, rather than opportunity. When applied to suicide, a loosening of community and collective responsibility could cause suicide. Cultural goals (i.e., individualism, materialism, technicism, and secularism) leave many people feeling estranged from our larger society and this alienation causes them to take their own lives.

The opposite of anomic suicide is fatalistic, which is related to an oppressive system of rules in a particular segment of society. The person comes to feel as though they have no choices and that death would be better than living without freedom. Durkheim suggested that evidence for fatalistic suicide might be found in concentration camps and prisons. Moller (1996) discusses the effect of control and torture on the will of the Jewish people during the oppressive Nazi regime:

> It is astonishing that the prisoners in the death camps got up at all. Yet, prisoners did indeed get up and did gather the resources necessary to survive another day. In the framework of extremity—of exhaustion, sickness, and frailty—the thirst for survival continued to motivate the decisions of the prisoners. Prisoners either got up or died; they either faced an unbearable world knowing they would have to bear it or gave up. (p. 222)

Overall, the emphasis of Durkheim's theorizing about suicide is the idea that sociological, political, religious, and cultural variables have a greater predictive ability for high risk subgroups and populations than the psychological variables. The key is the level of analysis Dukheim preferred (groups) versus individuals and his theoretical position was/is innovative in the field of suicidology.

Moller's (1996) review of the contemporary sociological explanations of suicide is atypical of US sociologists, which is why I am drawn to and have incorporated some of his ideas in my model for suicide study which is outlined later in this manuscript. He provides a cultural critique of factors such as individualism, materialism, secularism, and technicism, stating that these cultural values have led to meaninglessness, existential angst, and social isolation within our modern culture. His work has centered on the ways that our culture has alienated dying and terminally ill people as well as their families. Fear of death in our culture is crippling and has resulted in the rejection and alienation of dying people. This explanation could extend to older adult suicide, with our cultural fear of death leading to an avoidance of anything death-related, including suicide. Going a step further with his critique of US American cultural values and fear of death, he writes about the stigma and shame that survivors (family and friends who are left behind when a suicide has occurred) must face in addition to their grief (Moller, 1996). Family members who survive their loved one's suicide are stigmatized by society's blame and rejection of the person who died and the family system supporting

him/her. Similarly, Harwood and colleagues (2002) add to this important body of research by studying the impact that elder suicide has on family and friends of elders who have killed themselves. They found that the shame and guilt of having a loved one die in this manner was isolating for the family and they tended to blame themselves and others for not being able to stop it.

Epistemological evidence: Sociological methods. When considering the "forest and trees" of epistemology, one of the sometimes confusing aspects of sociology is the seemingly large jump from an observed phenomenon between two or more variables, the empirical testing of that event or relationship, and the generalization to a whole society of people. This discussion about mathematical relationship between observation and sociological "law" is relevant for connecting the practice of research with the philosophy of theorizing, including applied sociological research on elder suicide. Merton (1957) writes that, "the notion of directed research implies that, in part, empirical enquiry is so organized that if and when empirical uniformities are discovered, they have direct consequences for a theoretical system" (cited in Miller & Salkind, 2002, p. 27).

In summary, sociological theories of suicide focus on the broader impact of suicide on society and vice-versa. Political, social, and cultural trends have been theorized to cause rates of suicide to change depending on the social forces at play in a particular time period or geographic region. The work of Durkheim has been most influential in the study of suicide from a sociological perspective. In order to have a comprehensive picture of the causal theories of suicide, it is also important to have a brief introduction to the developmental theories that have influenced the

interdisciplinary field of gerontology, which has both psychological and sociological influences.

Gerontological theories

The gerontological research on suicide has largely focused on specific cognitive or behavioral theories, but there are a few developmental theories of aging that are useful for understanding elder suicide. Activity theory maintains that there is a direct relationship between activity levels and life satisfaction and was based in the Kansas City Study of Adult Life (Havighurst, 1972; Lemon, Bengston, & Peterson, 1972; Maddox, 1966; Spence, 1975). As one ages optimally, one manages to stay active and maintains significant social roles. Activities are delineated into three main types—informal, formal, and solitary—and the level of intimacy increases with the role supports the elder enjoys from these activities. Role supports serve to stabilize and cushion the elder through various transitions. When applied to suicide research, one could say that suicide risk increases in older age because older adults are less active and subsequently more isolated and less satisfied with life.

Disengagement theory—a prominent gerontological theory relevant to the discussion of suicide—is also based on the Kansas City Study of Adult Life. Disengagement theory purports that as people get older and face the inevitability of death, they disconnect themselves from their social network and the network disconnects as well from the individual (Cumming & Henry, 1961; Damianopoulous, 1961; Hendricks, 1994). This seems similar to Moller's (1996) discussion of society's fear of death and the subsequent alienation of dying people, but with one difference. Disengagement is mutually satisfying and beneficial (society and individual both detach) according to this theoretical perspective and it is possible that either the

individual or society can initiate the separation. Society detaches so that the individual's death will not disrupt the social system; the severing of ties serves a function for the system and the individual. Elders gradually decrease their social roles because "the individual becomes sharply aware of the shortness of life and scarcity of time remaining…" (Cumming & Henry, 1961, p. 215). This theory is important for the field of gerontology because it marked a shift from the individual or psychological emphasis on aging to a sociological or societal focus, while still keeping sight of the individual who also benefits.

Critics have found fault with the idea that disengagement is universal, inevitable, and intrinsic (Quadagno, 1999). Some people disengage, but there is plenty of evidence to suggest that others grow more engaged as they near death, because social connection with others becomes much more of a priority (Moller, 1996, 2000). Disengagement theory has been used in suicidology among elders. Ofstein and Acuff, (1979) proposed a causal model hypothesizing that disengagement leads to egoism, which subsequently leads to suicide. This conceptual model was not tested empirically, but proposed a theoretical relationship connecting disengagement theory with Durkheim's egoistic suicide among elders. It has also been theorized that men have higher rates of suicide because they suffer a greater loss of social roles. They often occupy formal places of status in the society and have more difficulty adjusting to the loss of status than do women. One way they disengage from society prematurely is by killing themselves. One problem with disengagement theory as a proposed model for studying suicide is that despite the position that disengagement is universal, intrinsic, and inevitable, suicide among various subgroups of elders is widely variant. For example, the rate for elder women was 4.1 per 100,000 people and 31.8 for elder men

(2002). It seems that while some elders kill themselves, many others remain actively engaged with society until their deaths by natural or accidental causes.

The causal theories of suicide are complex and sometimes shortsighted, mostly due to the intricate matrix of individual and social factors that influence a person's decision to die by suicide. The psychological, sociological, and gerontological theories are not mutually exclusive—just different ways of investigating and explaining a complex social problem. Further complicating matters are the often-differing needs, issues, and goals of the elder community, both within and among these sub-groups. For this reason, successful gerontologists and suicidologists have learned to work as an interdisciplinary community, while maintaining a clear focus on the specific needs, issues, and goals of the clients and research they are doing. Having a broad understanding of psychological, sociological, and gerontological theory is helpful for working with other disciplines interested in reducing suicide among young-old, middle-old, and the oldest-old. The next section of this manuscript proposes the sociological autopsy method of studying suicide, followed by the results of the study.

Chapter III: Methods

Sociological Studies of Suicide: Development of Sociological Autopsy Method

While there is a wealth of research on suicide practice, there is much less from a sociological approach. Epidemiological research could be characterized as sociological and many who analyze trends are sociologists. The disciplinary line between sociology, public health, social psychology, and policy analysis is quite fuzzy, although I am not sure that sociologists would appreciate that description. In short, most sociological research on suicide has grown from Durkheim's work. There are numerous empirical articles outlining the social disconnection of various groups from society, therefore leading to anomic suicide. Kaplan, Adamek, and Martin (2001) use the term "society assisted suicide" and cite poor prevention efforts and poor training of physicians to detect and treat depression among older adults. The term "society assisted suicide" is strikingly similar to Durkheim's anomie—the idea that society is responsible for taking care of its citizens. The lack of prevention programs, inadequate research on effective treatment for suicidal elders, dismal funding, and weak legislation constitute negligence on the part of our whole culture.

Status integration theory is based on the social component of Durkheim's work. Gibbs (1964) first coined this term in his doctoral dissertation in 1957, which was further developed into a co-authored book, *Status Integration and Suicide: A Sociological Study*. He and his mentor developed a framework for testing the integration of different groups and the subsequent effect on the suicide rates for these populations (Gibbs, 1969, 1982, 1987, 2000; Gibbs & Martin, 1964/2001, 1974, 1981). Other articles have been written about the theoretical model and criticisms of the model (Schalkwyk, Lazer, & Cumming, 1979; Stack, 1978, 1990b; Stafford & Gibbs, 1985,

1988.) While these models have advanced our understanding of suicide from a sociological perspective, they have omitted the political and social policy aspects of Durkheim's original theory. Gibbs and Martin (1964/2001) state, "In view of the difficulties involved in attempting to distinguish clearly between these concepts, we have decided to concentrate our efforts on social integration, the concept central to Durkheim's general conclusion" (p. 7).

All of these studies, qualitative and quantitative, have important implications for the suicidology of older adults. The work of Gibbs and colleagues (Gibbs, 1969, 1982, 1987, 2000; Gibbs & Martin, 1964/2001, 1974, 1981) is lacking several other significant parts of Durkheim's theory. For example, Durkheim was also interested in the connection between political climate and suicide. Gibbs and Martin chose instead to focus on employment practices (Gibbs, 2000), marital status (Gibbs, 1969, 1982, 2000; Gibbs & Martin, 1964/2001, 1974, 1981), race and gender (Gibbs, 1987; Gibbs & Martin, 1964/2001), international comparisons (Gibbs & Martin, 1964/2001), and religious practices (Gibbs & Martin, 1964/2001). Another limitation of Gibb's work is a failure to account for overall levels of violence. He suggested that another area of study would be to study trends in times of war, but has not published research in that area. Another limitation of their work was not explaining the role of age and unique variables that are relevant to the high rates of elder suicide. Gibbs and colleagues failed to recognize other statuses than "traditional" definitions of family. For example, many of the single men and women in the study were likely gay, lesbian, or bisexual. An obvious limitation to studying sociological suicide patterns is the failure of the state to recognize same-sex unions, so the data are not widely available for analysis of suicide by partnered and unpartnered GLB families as it pertains to social cohesion. In studying

the broad sociological trends, it is important not to lose the trees for the forest, so to speak. Both the qualitative and quantitative data gained through research with older adults are valuable and can better inform policy, practice, research, and education in gerontology (from all disciplines). It would be a useful contribution to incorporate the idea of status integration into a more comprehensive model of suicide, one that includes political, economic, status integration, access to specific methods (e.g., guns), and violence of other kinds.

Sociological Autopsy Approach: Overview

The term "sociological autopsy" was originally coined by Chatterjee and Bailey (1993) as a method for studying all broader social problems from a sociological perspective. Sociological autopsy in this study is defined as a systematic identification, "dissection," and analysis of social and political variables, in a Durkheimian frame, that contribute to higher rates of suicide death among different social groups. The underlying assumption of this approach is that sociological variables are powerful determinants of suicide. While individuals make the choice to die by suicide, rates of suicide are higher among some groups of people (like older adults), in some parts of the world, and in some cultures rather than others. These factors are not solely attributed to individual choices, but are subject to them collectively (which affects group suicide rates). A systematic dissection and measurement of sociological variables can help inform policy and practice with older adults and bring us closer to a comprehensive theory of suicide. The research hypotheses for this study are:

H_1: Political climate has a direct (+) effect on gun access

H_2: Political climate has a direct (+) effect on violence climate

H_3: Political climate has an indirect effect on suicide rates by influencing gun access and violence climate

H_4: Economic climate has a direct (+) effect on violence climate

H_5: Economic climate has an indirect effect on suicide rates by influencing gun access and violence climate

H_6: Status integration has a direct (-) effect on violence climate

H_7: Status integration has a direct (-) effect on suicide rates

H_8: Status integration has an indirect effect on suicide rates by influencing gun access and violence climate

H_9: Gun access and violence are directly related to each other

H_{10}: Gun access has a direct (+) effect on suicide

H_{11}: Violence climate has a direct (+) effect on suicide

H_{12}: The proposed theoretical model is a good fit for the data (see Figure 1)

Figure 1: Proposed Theoretical Model of Suicide (Model I)

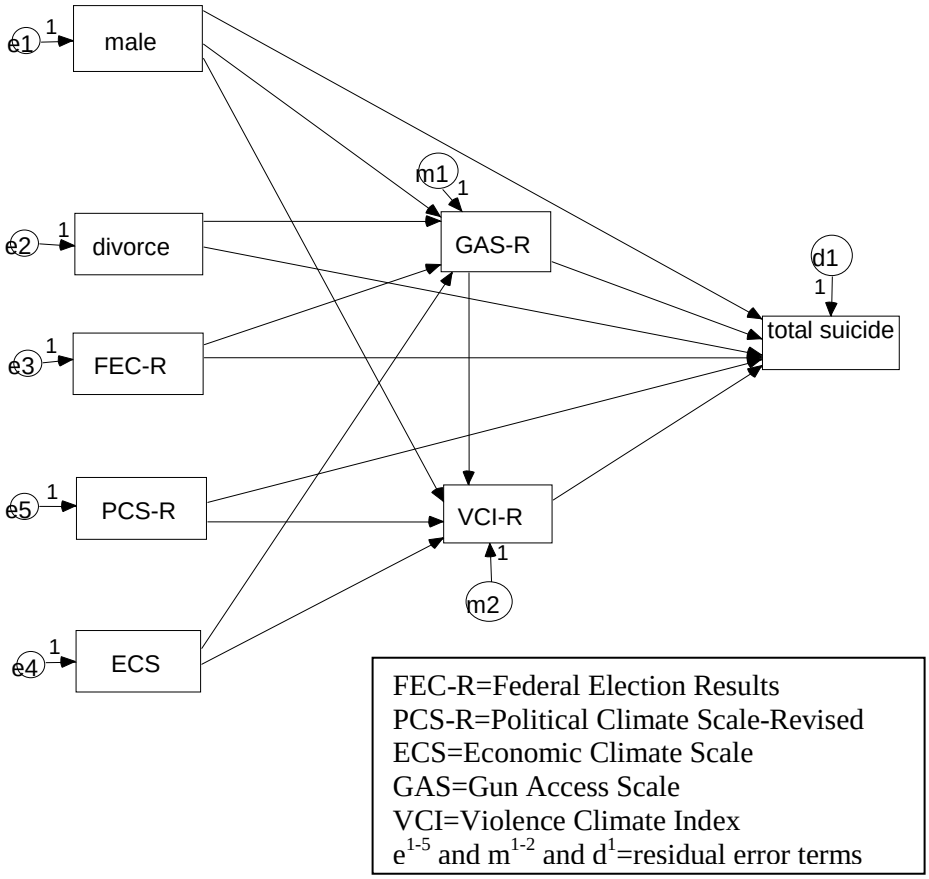

Sociological Autopsy Model

An important step in the prevention of older adult firearm suicide is the development of a useful research framework and theoretical model that synthesizes existing knowledge about the historical, social, and political context in which people live. Little research—psychological, sociological, epidemiological, or international—has focused on the political variables discussed in Durkheim's original study. For this reason, this study seeks to combine aspects of status integration theory with measures of political climate, economic climate, violence climate, and gun access. Since firearms are the most commonly used method of suicide and since firearm policy is highly political and varies a great deal from state to state, these variables will be used to shed light on the high rates of suicide overall, firearm suicide overall, elder suicide overall, and elder gun suicide rates in the United States in 2000.

Because there has been so little empirical research of older adult suicide from a comprehensive, macro systems perspective, a conceptual model has been developed for this purpose. Rogers, Lewis, and Oney (2003) presented one theoretical model of elder suicide at an annual meeting of the American Association of Suicidology, but the model did not include social policy or firearm variables. Another limitation was that the assisted-living sample (N=350) they studied was 75.4 percent female, which does not adequately represent those most at risk of elder suicide—men. They concluded by stating that the data did not fit the theoretical model and was not particularly helpful in predicting suicide among older adults, which is why more work is needed (J. Rogers, personal communication, April, 23, 2003). The sociological autopsy research framework adapts the psychological autopsy model (Litman, Curphey, Shneidman, Farberow, & Tabachnick, 1963; Weisman & Kastenbaum, 1968) for a sociological

context. The basic idea of the psychological autopsy is to gather as much information as possible about the psychological life of a person who has died by suicide. The data are gathered from key informants, medical records, personal artifacts and socio-demographic sources in order to formulate a comprehensive history about the risk factors at play in the person's choice to kill himself/herself (Conwell et al., 2002; Cooper, 1999; Phillips, Li, & Zhang, 2002; Upanne, 2002). The sociological autopsy model uses aggregate data to test causal relationships within the larger sociological context. While individuals make the choice to die by suicide, state-level suicide rates are the domain for sociological research. A systematic dissection and measurement of state-level data can help inform practice, improve policies, and prevent suicide in older adults who might otherwise be inclined to end their lives.

Predictors

Political Climate

Durkheim's political theory has not been systematically tested, but there are several studies of interest for variable selection in this study. Hays and Glick (1997) investigated the role of partisanship, ideology, media, and timing in their research of "moral policy" dealing with living wills. They measured policy practice through event history analyses, which predicted the acceptance of living will legislation through multiple independent measures including: ideological liberalism, democratic control, innovativeness, mass media exposure, public opinion polling, and religious affiliation in each of the 50 states. These sociological variables provided a linear model, which predicted adoption of living will legislation and the role of PACs in the legislative process. The agenda setting and political climate indicators were gathered from publicly available, secondary sources. This method was useful and effective for analyzing moral

policy legislation. Because gun policy and suicide could be considered "moral policy" as well, similar measures were chosen for the political indicators in the present study.

Interparty competition has also been measured as a way to quantify partisanship in state-level politics. Ranney (1965) examined interparty competition based on three dimensions: proportion of success, duration of success, and frequency of divided control. *Proportion of success* was operationally defined and measured as the percentage of votes won by each party for statewide offices and the percentage of seats in the legislature held by each. *Duration of success* was measured as the length of time each party has controlled the statewide offices and/or legislature and *frequency of divided control* was the proportion of time in which control of the governorship and legislature has been divided between the Republican and Democratic parties (Bibby & Holbrook, 1999; Kenney & Rice, 1985; Ranney, 1965). The Ranney Index ranges from .0000 (total Republican success) to 1.0000 (total Democratic success). Ranney (1965) had the following categories:

.90000 to 1.0000: one-party Democratic
.70000 to .89999: modified one-party Democratic
.30000 to .69999: two-party
.10000 to .29999: modified one-party Republican
.00000 to .09999: one-party Republican

Bibby and colleagues (1983) updated the index, noting that, "interparty competition gives more weight to partisan control of the state legislature than it does to winning the governorship" (p. 67). Another problem with measuring state partisanship or interparty competition is that the index is a static measurement of something that is in constant flux. The composition and competition between parties is not static, but a dynamic, changing system. One attempt to deal with this issue of time was attempted by Kenny and Rice (1985). They used the Ranney Index over a longitudinal study period to

examine how states have changed between 1948 and 1980. They found that five demographic variables explained a significant amount of the differences in states during the study period: race, income, union membership, urbanization, and voter migration across state lines (Kenny & Rice, 1985). States became more Democratic when their populations became "more black, less urban, and more unionized, and relatively less wealthy, and fewer in numbers" (p. 346). Each of these differences was a statistically significant predictor of partisanship change except unionization (Kenny & Rice, 1985).

Holbrook and Van Dunk (1993) studied electoral competition and developed a measure that included district-level competition as well. For their measure of district-level competition, they used three measures. First, they collected the percentage of popular vote won by the winning candidate. Second, they used the candidate's margin of victory, which is especially helpful when there are two or more candidates running in a given election. Third, they used a measure of how "safe" the given seat was (i.e., a seat was considered safe if the percentage voting for the candidate was above 55 percent). The correlation between the Ranney and Holbrook-Van Dunk measure was α=.68, indicating a reasonable level of agreement between indices (Holbrook & Van Dunk, 1993). The Ranney Index has been consistently updated and tracked over a long period of time (1948-2001) (Bibby, Cotter, Gibson, & Huckshorn, 1982 & 1990; Bibby, Gibson, Cotter, & Huckshorn, 1983; Bibby & Holbrook, 1996,1999, 2003; Ranney, 1976). Given that there is not a perfect measure of political climate, several measures were collected and tested for the present study. The Ranney Index, Ranney II Index, Erikson, Wright, and McIver indices (Partisanship and Ideology) was used in conjunction with a measure from the Federal Election Commission Scale [FEC] results for the 1988, 1992, 1996, and 2000 presidential elections (measured as the percent of

people in each state who voted for the Republican candidate) along with two gun-policy specific political measures.

The Political Climate Scale was first measured using seven indicators: Ideology index, and Partisan politics index, federal firearm license rate per state (FFL), Friends of the National Rifle Association donations (FNRA), Ranney Index, Ranney II Index, and Federal Election Commission Scale results. Erikson, Wright, and McIver (1993) developed the ideology and partisanship indices to analyze the ways political climate affects state-level (legislative) decision-making in the United States. Large, probability samples ranging from 292 (in WY) to 14,773 (in CA) respondents were asked to rate themselves as "conservative," "moderate," or "liberal" in ideology as well as "Republican," "Independent, "or "Democrat." Coefficients were developed and weighted based on population density for each state. Coefficients ranged from –1 (conservative) to 1 (liberal) on the ideology index and from –1 (Republican) to 1 (Democrat) on the partisanship index. Reliability alphas for Partisanship and Ideology are .85 and .92, respectively (Erickson, Wright, & McIver, 1993).

The FFL data were obtained from the HELP network (2003) Firearm Injury Prevention State Status Report. The HELP network data were collected from a variety of sources (CDC, Bureau of Alcohol, Tobacco, & Firearms, The Brady Campaign, and the National Gun Policy Survey conducted by the National Opinion Research Center). Conceptually, the FFL variable is defined as the number of licensed dealers in a state. Federal gun dealership licenses are issued by the Federal government to applicants in each state. The Friends of the NRA data were obtained from the NRA website (NRA, 2003). The site was determined to be a reliable source of data after using Vernon and Lynch's (2000) criteria for evaluating website's authenticity. Although it is not ideal to

collect data from a web source, it is difficult to obtain this information directly from the National Rifle Association because the organization is for members only. The weighted rate of donation per state was calculated by adding all the fundraising efforts from the FNRA website, adjusted for population density, dividing by the population and then multiplying by 100,000 for standardization.

Data for the Federal Election Commission Scale were obtained from the Federal Election Commission's data files. The full data files can be obtained from the Federal Election Commission by writing to:

> Eileen J. Canavan, Deputy Assistant Staff Director for Disclosure
> Federal Election Commission
> 999 E Street, NW
> Washington, DC 20463

The data were collected by the official polling stations for the 2000, 1996, 1992, and 1988 presidential elections. The data files are the official results from the Federal Election Commission. The percent voting for the Republican candidate in each state was calculated in each of the 4 presidential elections based on the actual number of total votes and votes for the Republican candidates. The measure was entered in SPSS for each percentage (carried to the ten-thousandths). The Republican candidate was chosen because of the party's long history of support for gun rights and strong PAC backing of the National Rifle Association. In an illustrative statement during his keynote address in Orlando, Florida Governor, Jeb Bush, thanked members of the NRA for helping to elect his brother president in 2000. Bush cited exit polls that showed 48 percent of the voters in that presidential race were gun owners. He said, "Were it not for your active involvement, it's safe to say my brother would not be president of the United States" (Join Together, 2003).

Data Properties: Political Climate

The indicators of political climate were: Ideology index, and Partisan politics index, federal firearm license rate per state (FFL), Friends of the National Rifle Association donations (FNRA), Ranney Index, Ranney II Index, and Bush voting in 2000. There were two missing values for partisanship and ideology (Alaska and Hawaii). Those values were replaced with the series mean rather than eliminating those cases. The average of people who voted for Bush in the 2000 election was 51.55 percent. The mean for the Ranney Index and Ranney II Index was .5615 and .6431 respectively. The averages for Partisanship and Ideology were 7.11 and -14.30 respectively. The average number of Federal firearm licensed dealers in the United States was 55.55 and the average donation to the National Rifle Association was $4,934.24 per state. Table 1 outlines the ranges and standard errors for political climate data.

Table 1: Political Climate Data Properties

				Mean	
	Range	**Minimum**	**Maximum**	**Statistic**	**S.E.**
Federal Election Commission 2000	.359	.319	.678	.504	.012
Federal Election Commission 1996	.275	.268	.543	.423	.009
Federal Election Commission 1992	.207	.290	.497	.382	.007
Federal Election Commission 1988	.223	.439	.662	.545	.007
Ranney Index	.824	.176	1.000	.562	.036
Ranney II Index	.606	.337	.944	.643	.024
Partisanship	52.700	-17.400	35.300	7.110	1.577
Ideology	27.800	-28.000	-2.000	-14.300	1.041
Federal Firearm Licenses	197.000	8.600	205.600	55.554	5.387
Friends of the National Rifle Association	43734.560	0.000	43734.560	4934.236	998.655

Valid N=50

Many of the statistical tests used in the study rely on certain standard assumptions about the distribution of the data. Violations of the assumptions increase the likelihood of Type I and Type II errors, which leaves interpretation of the final results in jeopardy. Pedhazur (1997) notes, "Knowledge and understanding of the situations when violations of assumptions lead to serious biases, and when they are of little consequence, are essential to meaningful data analysis" (p. 33). Linearity, multicollinearity, homoscedasticity, and normality assumptions were tested for violations in the political climate data set. Visual inspection of the plots revealed a linear relationship for univariate and bivariate distributions for Ideology, Partisanship, FFL, FNRA, Ranney Index, Ranney II Index, and Federal Election Commission Scale results. The distribution of cases was linear with regard to Political Climate overall and there was a linear bivariate relationship between each of those variables and gun access and each of the four dependent suicide variables. The assumption of linearity was met for these data. Because these indicators were combined in one scale, the linear relationship between all the indicators was anticipated. A violation of the multicollinearity assumption was not an issue. Table 2 presents the zero-order correlation matrix for Political Climate. The development of the final scale is discussed in Chapter VI. There were two variables that violated the skewness and kurtosis assumptions for normal distribution of the political climate data. The formula for figuring skewness is as follows:

$$\text{Skewness} = \frac{\Sigma_i^N{=}_1(Y_i - Y)^3}{(N-1)\,s^3}$$

The formula for testing violations of the assumption of skewness (ses) is: $\frac{\sqrt{6}}{\sqrt{N}}$

FFL was positively skewed and the statistic revealed that it was slightly more than the allowable limits (skew=2.354, s.e.=0.337). The formula for kurtosis is:

$$\text{Kurtosis} = \frac{\Sigma_i^N{=}_1(Y_i - Y)^4}{(N-1)\,s^4}$$

The formula for testing violations of the kurtosis assumption is: $\frac{\sqrt{24}}{\sqrt{N}}$

FFL also violated the assumption of normality with regard to kurtosis (kurtosis=6.237, s.e.=.662). Similarly, FNRA violated both assumptions for skewness and kurtosis (skew=4.004, s.e.= .337; kurtosis=19.299, s.e.= .662). All other variables (Federal Election Commission, Ranney Index, Ranney II Index, Partisanship, and Ideology) were normally distributed with regard to skewness and kurtosis. Visual inspection of the data histograms confirmed that although there are violations of the skewness and kurtosis assumptions, the degree is not marked enough to cause serious problems with the interpretation of findings. Also, the plan was not to use the indicators separately, but in a combined factor score as a scale for the full analyses. The skewness and kurtosis problems were largely eliminated when the factor score was used to analyze the assumptions for the Political Climate Scale. The distribution was only slightly skewed to the right for Political Climate (skew=.111, s.e.=.337) and did not violate the normal distribution assumption. Similarly, the distribution did not violate the kurtosis assumption either (kurtosis=-1.064, s.e.=.662).

Visual inspection of plots for the data confirmed that the assumption of homoskedasticity for this data set was also met. None of the plots revealed data that were outside the margin of error for heteroskedastisticity. The data have similar variance with regard to the errors across all levels of the predictors. Tabachnick and Fidell (1996) note that a slightly heteroskedastic data set is not a problem, but serious violations of this

assumption can lead to increased possibility of a Type I error. Again, Nevada was a consistent outlier when plotted with the criterion. Alaska, Montana, and Wyoming were also frequent outliers for the plots of FFL, FNRA, Partisanship, and Ideology when plotted with the four dependent suicide variables. All cases were considered in the analysis because the sample is too small to sacrifice one or two cases.

Table 2: Correlation Matrix for Political Climate

	1	2	3	4	5	6	7	8	9
1. Federal Election Commission 2000	1.000								
2. Federal Election Commission 1996	.602**								
3. Federal Election Commission 1992	.713**	.541**							
4. Federal Election Commission 1988	.693**	.398**	.720**						
5. Ranney Index	.175	.202	.430**	.301*					
6. Ranney II Index	-.219	-.094	.107	-.119	.764**				
7. FFL	.499**	.307*	.031	.158	-.190	-.369**			
8. FNRA	.440**	.040	.081	.180	-.086	-.270	.568**		
9. Partisanship	-.215	-.069	.012	-.222	.725**	.855**	-.233	-.135	
10. Ideology	-.791**	-.434**	.-737**	-.604**	-.323*	.104	-.225	-.234	.067

*= $p<.05$ **=$p<.01$

Economic Climate

The indicators used for measuring economic climate in the present study were derived from the scales used by others (Gastil, 1971; Hackney, 1969; Loftin & Hill, 1974). Most previous research has focused on state-level analysis (Gastil, 1971; Hackney, 1969; Kunce & Anderson, 2002; Loftin & Hill, 1974; Parker & Smith, 1979; and Smith & Parker, 1980), which was the level of analysis chosen for the present study. Economic climate has been measured by Loftin and Hill (1974) using a six-item scale including: infant mortality rate, percent of the population who are illiterate, percent of families with income below the poverty level, percent living in single parent-headed households, percent of Armed Forces Mental Test failures, and percent of people with less than a high school education. Their measure, called the *Structural Poverty Index,* has demonstrated adequate reliability: α=0.893 (Parker & Smith, 1979) and α=0.846 (Loftin & Hill, 1974). Their results have demonstrated that economic factors (poverty), not regional "southerness" or racial composition, were directly related to variations in state homicide rates.

Parker (1989) examined the impact of poverty on state violence and similarly concluded that economic factors were directly related to homicide (Parker, 1989). Parker measured homicide in standard metropolitan statistical areas (SMSAs) in order to "detangle" the subcultural effects from the socioeconomic effects. Parker used the ordinary least squares (OLS) method of estimation for structural equation modeling (SEM) to SMSA data (N=299) using the Gini Index (from Statistical Abstracts) and came to the conclusion that poverty is significantly related to three of the four types of homicide. Poverty was the dominant predictor of family/domestic homicide and other felony homicides. They found that as poverty increased, violence increased. From this

analysis, Parker delineated two theories about the causes of homicide: subcultural and socioeconomic. A comparison of economic factors with suicide rates have found that income was inversely related to suicide (Barnes, 1975; Stack, 1980).

Economic climate was conceptually defined in the present study as the opportunities available for those at the bottom of the socioeconomic ladder in each state. Measures for the present study used an adaptation of Loftin and Hill's (1974) poverty index, with the exclusion of the failure rate of Armed Forces Mental Test. The Economic Climate Scale included: education, literacy, poverty, infant mortality, and single-parent households. One elder-specific measure was used in place of poverty level: percent of elders below the poverty level. The other measures—literacy, single parent households, education, and infant mortality—were included with the elder-specific measure for Elder Economic Climate. All data were collected from the 2000 US Census. Education was operationally defined as the percent of people with less than a high school education (i.e., did not graduate) in a given state as reported by the 2000 census. Literacy was operationally defined as the percent of people with level I literacy reported by each state in the National Adult Literacy Survey (US Department of Education, 2005). Level I literacy represents the lowest level of proficiency out of five levels. People performing at this level can usually sign their own name, identify a country in a short article, locate one piece of information in a sports article, locate an expiration date on a driver's license, and total a bank deposit entry (US Department of Education, 2005). People with this level of literacy usually cannot locate eligibility from a table of employee benefits, locate an intersection on a street map, locate two or more pieces of information in a sports article, identify and enter background information on a social security card application, or calculate total costs of purchase from an order form (US Department of Education, 2005).

The indicator used for poverty was the percent of people with average incomes reported below the Federal poverty line in the 2000 census. Similarly, elder poverty was the percent of people over age 65 in each state who had incomes below the poverty line at the time of data collection during the 2000 census. Infant mortality was measured as the rate of children who died before their first birthday out of the total live births in the state. The rate of infant mortality was reported as deaths per 1,000 births.

Data Properties: Economic Climate. The indicators of economic climate were: education, literacy, poverty, infant mortality, and single-parent households. One elder-specific measure was used in place of poverty level: percent of elders below the poverty level. There were no missing data for any of the 50 states. The average percentage of single parent households in the 50 states was 43.0 and the average percentage of people with less than a high school education was 18.05 percent in 2000 (US Department of Education, 2005). The average percentage of people with level I literacy in the 50 states was 17.88 percent and over 7.08 children died before their first birthday out of 1000 live births, on average in the United States in 2000. Around 11.6 percent of the people in the US were living in poverty and 9.38 percent of older adults were considered poor in 2000. Table 3 presents the ranges and standard errors for economic climate data.

The four main assumptions that are important for regression equations were tested for violations: linearity, multicollinearity, homoscedasticity, and normality. There were no missing data for any of the 50 states. Visual inspection of the plots revealed a linear relationship for bivariate distributions. The distribution of cases was linear with regard to poverty, elder poverty, education, infant mortality, literacy, single-parent households, and there was a linear bivariate relationship between each of these variables and gun access,

Table 3: Economic Climate Data Properties

	N	Range	Minimum	Maximum	Mean	
					Statistic	S.E.
Single parents	50	.07287	.02223	.09510	.04300	.00195
Education	50	.15475	.11667	.27142	.18045	.00618
Literacy (level 1)	50	.19000	.11000	.30000	.17880	.00657
Infant Mortality	50	6.0566	4.6071	10.6636	7.0827	.18726
Poverty	50	.12912	.06355	.19267	.11618	.00430
Elder Poverty	50	.12205	.05622	.17827	.09385	.00386
Valid N	50					

violence climate, and each of the four dependent suicide variables. The assumption of linearity was met for these data. Because the plan was to combine these indicators in one scale, violation of the multicollinearity assumption is not an issue. Table 4 presents the zero-order correlation matrix for Economic Climate.

Development and testing of the final Economic Climate Scale is reviewed in Chapter V.

Table 4: Correlation Matrix for Economic Climate

	Single-Headed	Infant Mortality	Education	Literacy	Poverty
Infant Mortality	-.034				
Education	.841**	-.007			
Literacy	.831**	.015	.881**		
Poverty	.863**	.014	.775**	.673**	
Poverty 65+	.908**	.008	.821**	.755**	.837**

*=p<.05 **=p<.01

There were a few issues with regard to skewness and kurtosis for the economic climate data set. The following variables violated the skewness assumption: single parent households (skew=1.371, s.e.=0.337), poverty (skew=.809, s.e.=.337) and elder poverty (skew=1.181, s.e.=0.337). All other variables (education, literacy, and infant mortality) were normally distributed with regard to skewness. One indicator, single-parent

households, violated the assumption for kurtotic normal distribution (kurtosis=2.9, s.e.=.662). Visual inspection of the data histograms confirmed that although there are violations of the skewness and kurtosis assumptions, the degree is not marked enough to cause serious problems with the interpretation of findings. Also, the indicators were not used separately, but were combined in a factor analysis as a scale for the analyses. The skewness and kurtosis problems were largely eliminated for the Economic Climate Scale and the Elder Economic Climate Scale. The distribution was only slightly skewed to the right for Economic Climate (skew=0.775, s.e.=.337) and did not violate the normal distribution assumption for kurtosis (kurtosis=0.134, s.e.=.662). The Elder Economic Climate Scale had a similar distribution (skew=0.901, s.e.=.337; kurtosis=-0.257, s.e.=.662) and violated the normality assumption for skewness, but was within acceptable limits for kurtosis. The consequences of a skewed distribution include an increasingly wider disparity between the sample mean and median and if the skewness is larger than 2.0, the predictive power of the equation is reduced. In this case, the data were not so skewed as to impede the analysis.

Visual inspection of plots for the data confirmed that the assumption of homoskedasticity for this data set was met. None of the plots revealed data that were outside the margin of error for heteroskedastisticity. The data have similar variance with regard to the errors across all levels of the predictors. Again, Nevada was a consistent outlier when plotted with the criterion. Two exceptions were the factor score for the Economic Climate Scale when plotted with firearm suicide overall and elder gun suicide. The bivariate outliers were Arkansas, Louisiana, and Mississippi. All cases will be considered in the analysis, because the sample is too small to sacrifice one or two cases. Nevada was more than three standard deviations higher than the mean (when plotted with

each of the criterion: total suicide, firearm suicide, elder suicide, and elder firearm suicide) for the following economic variables: single-parent households, education, literacy, infant mortality, poverty, and elder poverty.

Status Integration

Some of the most prominent risk factors associated with suicide and status integration are: age, gender, marital status (widowhood and divorce specifically), physical health/disability, and occupation. Conceptually, status was defined by Gibbs (1969) as the stability and durability of social relationships within a population. Integration was defined as the extent to which people conform to social expectations for their status and the degree to which people occupy incompatible statuses (Gibbs, 1969; Stack, 1990). There are five main postulates pertaining to suicide and status integration theory that have been proposed by Gibbs (1969, pp. 521-522). First, the suicide rate of a population varies inversely with the stability and durability of social relationships within the population. Second, the stability and durability of social relationships vary directly with the extent that individuals conform to patterned social expectations placed upon them. Third, the extent to which individuals conform to social expectations is a function of the extent to which they are confronted with role conflicts. Fourth, the extent to which people experience role conflict is determined by the extent to which they occupy incompatible statuses and incompatible statuses will tend to be occupied infrequently. Finally, the degree of status integration in a population varies inversely with the degree to which people occupy incompatible statuses (Gibbs, 1969, 521-522).

McIntosh and colleagues (1994) have pointed out the great difficulties in finding a measure of social cohesion that covers all possible statuses of individuals in a population. Several articles have provided useful critiques of the status integration

model (Schalkwyk, Lazer, & Cumming, 1979; Stack, 1978, 1990b; Stafford & Gibbs, 1985, 1988); however these critiques have also missed some of the factors likely to explain elder suicide and firearm suicide. First, previous status integration research fails to link political variables, status integration, and suicide. Second, previous work has not investigated correlates of multiple kinds of violence (such as homicide, battery, robbery, and sexual assault) with suicide rates in a particular region. Third, Gibbs and colleagues did not examine specific methods of suicide, such as firearms. Finally, a major limitation in the specification of the model was the exclusion of socioeconomic factors.

Status integration measures included in this study are: gender, divorce, occupation, widowhood, physical health/disability. All indicators were measured using publicly available data. The US Census Bureau's publicly available data were used for the population-based measures of gender, occupation, divorce, widowhood, and health/disability. The status integration measures used for the general population were: gender, occupation, divorce, and general population health/disability. Status integration measures for elder-specific models included: gender, retirement, divorce, widowhood, and elder health/disability. Gender was operationally defined as the percent of males in a given state as reported by the 2000 census. Occupation was operationally defined as the percent of white-collar professionals reported by each state in the 2000 census. The indicator used for divorce was the percent of divorced people reported in the 2000 census. Similarly, widowhood was the percent of people widowed in each state at the collection of data during the 2000 census. Physical health/disability status was measured as the percent claiming full disability status according to the US Census in 2000. The US Census questionnaire allows for people to claim multiple disabilities: sensory (visual or auditory), physical (e.g., walking, lifting, and carrying), or cognitive (memory and

concentration) (Waldrop & Stern, 2003). For the general population analyses, the percent of all disabled people in the state were used and for the elder-specific analyses, the percent of people age 65 and older with disabilities was used.

Data Properties: Status Integration. The indicators of status integration were: gender, divorce, widowhood, retirement, occupation, disability, and elder disability. There were no missing data for any of the 50 states. The average percentage of males in the 50 states was 49.18 and the average divorce rate was 10.05 percent in 2000. The average percentage of divorces in the 50 states was 6.55 percent and nearly 35 percent were retired, on average. Around 32.89 percent of the people had professional/white collar jobs, on average. The average percentage of people reporting disabilities was 19.14 percent for the general population and much higher for older adults, with an average of 42.22 percent reporting a disability among people age 65 and older. Table 5 presents the ranges and standard errors for Status Integration data.

The four main assumptions that are important for regression equations were tested for violations: linearity, multicollinearity, homoscedasticity, and normality. Visual

Table 5: Status Integration Data Properties

					Mean	
	N	**Range**	**Minimum**	**Maximum**	**Statistic**	**S.E.**
Male	50	.03656	.48042	.51698	.49180	.00109
Divorced	50	.06295	.07526	.13821	.10053	.00186
Widowed	50	.05348	.03410	.08758	.06549	.00140
Retired	50	.16848	.28699	.45547	.34982	.00507
White Collar	50	.15574	.25685	.41259	.32885	.00485
Disabled	50	.13970	.14922	.28892	.19145	.00394
Elder Disabled	50	.22260	.36547	.58807	.42223	.00634
Valid N	50					

inspection of the plots revealed a linear relationship for bivariate distributions. The distribution of cases was linear with regard to gender, occupation, retirement, divorce, widowhood, disability, and elder health/disability individually. There was a linear bivariate relationship between each of those variables and gun access, violence climate, overall suicide, firearm suicide, elder suicide, and elder firearm suicide. The assumption of linearity was met for these data. Because the plan was to combine these indicators in one scale, violation of the multicollinearity assumption was not an issue. Table 6 presents the zero-order correlation matrix for Status Integration data.

Table 6: Correlation Matrix for Status Integration

	Divorced	Widowed	Retired	Male	Disabled	Disabled 65+
Widowed	-.234					
Retired	.163	.588**				
Male	.382**	-.796**	-.445**			
Disabled	.242	.526**	.852**	-.478**		
Disabled 65+	.255	.071	.581**	-.143	.721**	
White Collar	-.412**	-.194	-.443**	-.087	-.522**	-.560**

NOTE: *=p<.05 **=p<.01

There were some issues with regard to skewness and kurtosis for the status integration data set. The following variables violated the skewness assumption: male (skew=0.945, s.e.=0.337) and widowed (skew=-0.722, s.e.=0.337). There was one variable in the status integration data set that violated this assumption: widowed (kurtosis=1.566, s.e.=0.662). These variables were outside the limits of normal skew and kurtosis variation. Visual inspection of the data histograms confirmed that although there are violations of the skewness and kurtosis assumptions, the degree is not marked enough to cause serious problems with the interpretation of findings. Kline (1998) states, “The normality and homoskedasticity assumptions are less critical. For example, results of

significance tests of regression coefficients are relatively robust against moderate violations of these requirements" (p. 25).

Visual inspection of plots for the data confirmed that the assumption of homoskedasticity for this data set was met. None of the plots revealed data that were outside the margin of error for heteroskedastisticity. The data have similar variance with regard to the errors across all levels of the predictors. Nevada was a consistent outlier, but due to the small sample size, it was decided that this case would be left in the analysis. Nevada was more than three standard deviations higher than the mean (when plotted with each of the criterion: total suicide, firearm suicide, elder suicide, and elder firearm suicide) for the following status integration variables: gender, divorce, occupation, widowhood, retirement, and disability/elder disability.

Gun Access

Numerous studies link access to lethal means (i.e., firearms or materials for strangulation) with rates of suicide (Conwell et al., 2002; Cukier, 1998; Cutright & Fernquist, 2000; Miller et al., 2002; Romero & Wintemute, 2002; Kellerman et al., 1992; Killias et al., 2001; Wiebe, 2003). Results testing the gun access hypothesis have yielded mixed results, with some studies finding that as gun ownership or availability increased, suicide rates increased (Conwell et al., 1992; Cukier, 1998; Hemenway, 2004; Hemenway & Miller, 2002; Kellerman et al., 1992; Lester & Murrell, 1980; Lester, 1987; Romero & Wintemute, 2002; Snowdon & Harris, 1992), while others find no evidence of this (Cutright & Fernquist, 2000; Kleck, 2004; Lott, 1998). Several studies have made comparisons of gun access and suicide rates for general populations (Cukier, 1998; Killias et al., 2001), or for women specifically (Adamek & Kaplan, 1996; Miller et al., 2002).

The studies of specific age differences have found that age is directly associated with increased firearm suicide; younger people use guns significantly less often than older people. For example, Romero and Wintemute (2002) used CDC data files to examine trends in firearm suicide and homicide in the US between 1980 and 1998. The rate of firearm suicide increased with age during the study period. The rate of gun suicides among 15-24 year olds reached 6.7 per 100,000 and the rate among men and women aged 65 and over was more than double that of youth, or 14.6 deaths per 100, 000 during the same period (Romero & Wintemute, 2002). Shenassa and colleagues (2003) compared mortality data of 10, 287 suicides and 37,352 nonfatal hospitalizations for attempted suicide from 1990-1997. They found that protective factors associated with youth (e.g., good health, increased recuperative abilities, and decreased likelihood of being left alone for periods of time) moderated the lethality of parasuicide in non-firearm methods. Firearms were found, however, to have uniform lethality across the lifespan. In other words, if a gun was used, it almost always killed the person regardless of age. In one of the few case-control studies of firearm access and elder suicide, Conwell and colleagues (2002) used the psychological autopsy method to examine the suicide deaths of 86 victims age 50 and older. They found that, even after controlling for psychiatric illness, having a gun in the home was associated with increased risk for elder suicide (Conwell et al., 2002).

Gun access is somewhat tricky to study, because there are no standard, widely agreed upon measures for availability. For example, gun availability has been measured with proxies such as rate of *Guns & Ammo* magazines sold per capita (Duggan, 2003), rates of gun suicides (Brent, Perper, & Allman, 1987; Cook & Ludwig, 2003; Cutright & Fernquist, 2000; Lester, 1989; Miller, Azarel, & Hemenway, 2002), and rates of gun

homicides (Killias, van Kesteren, & Rindlisbacher, 2001; Lester, 1989; Miller, Azarel, & Hemenway, 2002.) Duggan (2003) helped tease the relative effects of gun ownership on suicide rates of men and women. He found that a 10 percent increase in gun ownership had a statistically significant increase on the rate of suicides for men and women. He compared the relative increase in suicide for men and women and found that there was a marked difference between the risk ratio for men and women. When the ownership increased 10 fold, the suicide risk increased 7.9 percent for men, but only 5.2 percent for women (Duggan, 2003). In a commentary about Duggan's work, Norberg (2003) aptly points out that the increase in suicide rate for men might not be a feature of gun ownership, but a propensity toward aggression.

It has also been suggested that access to firearms is a less important area of study because people who do not have access to firearms will find an alternative method. The *substitution or displacement hypothesis* was first introduced by Clarke and Lester (1989) as an alternative explanation for why restricting one method of suicide may or may not result in an overall reduction in suicide rates. *Displacement,* borrowed from criminology (Gabor, 1978; Repetto, 1976), is the idea that "blocking the opportunity for a particular crime simply results in its displacement to some other place or time, another method, or even some other kind of offense" (Clarke & Lester, 1989, p. 75). One study refuting the substitution hypothesis compared suicide deaths in 11 developed countries over a five year span (Farmer & Rohde, 1980). They concluded that substitution did not occur widely and that reduction in one method did explain a reduction in the rates of suicide in those countries. Clarke and Lester (1989) cite multiple studies that offer confusing results regarding the displacement hypothesis. For example, following a period of detoxification of natural gas in England, suicide rates

overall fell 38 percent, although suicide rates remained the same following detoxification of gas in Scotland and rose following detoxification of gas in the Netherlands (Clarke & Lester, 1989). Clarke and Lester also conducted several studies of gun suicides that had contradictory findings with regard to the substitution hypothesis in the United States. Two studies they conducted suggested that increased availability of guns creates additional suicides, two studies counter that finding, and one suggests some displacement, but not all, occurred (Clarke & Lester, 1989). They conclude by saying, "Some of the ambiguity in these results may be a result of poor measurement of gun ownership" (Clarke & Lester, 1989, p. 78). Many agree that the studies of gun access and suicide are incomplete because it is difficult to measure gun access. It is interesting to speculate how the theoretical understanding of gun suicide could be improved by including policy variables, status integration indicators, measures of economic climate, and/or violence indices. Access to a firearm may be the aggravating factor differentiating attempts from completions when there are high-risk circumstances like isolation, retirement, and depression.

Data about state-specific gun laws were obtained from The Brady Campaign, a national legislative resource for gun policy and research. These data were collected from a variety of sources (CDC, Bureau of Alcohol, Tobacco, & Firearms, and the National Gun Policy Survey conducted by the National Opinion Research Center) and included laws in effect February 1, 2001. The following are included in the measure of gun access in each state: state attorneys general regulations, state background check laws, concealed weapons laws, child access prevention laws, child safety lock laws, gun manufacturer liability laws, gun show check laws, juvenile possession laws, juvenile sale laws, licensing laws, local gun laws, record keeping laws, registration laws,

Saturday night special laws, secondary sales laws, and waiting period laws. The scale is composed of codings similar to a grade point average with a range from 0 to 4.

The Gun Access Scale subscales were: Juvenile Possession, Juvenile Sales, Child Access Prevention, Safety Locks, Preemption/Attorney General regulations, Secondary Sales, Concealed Weapons, and Background/Waiting. The *Juvenile Possession* subscale answers the question about whether it is legal for a juvenile to possess a firearm without parental permission or supervision. The *Juvenile Sales* answers the question about whether it is legal for a juvenile to buy a firearm without parental permission or supervision. The *Child Access Prevention* measures whether adults are required to store their firearms out of reach of children and whether there are penalties for leaving guns accessible to children. The *Safety Lock* measures whether guns must be sold with child safety locks (CSL) and/or include safety design features such as load indicators, magazine safety disconnects and restrictions on "junk guns." The *Preemption/Attorney General* subscale measures whether the state has made it legal for cities to enact stricter gun control laws than the state broadly. It also measures whether the state Attorney General can independently regulate firearms or establish gun safety standards as part of their responsibility to protect consumers. The *Secondary Sales* subscale centers around whether the state requires a criminal background check or reporting of secondary (private) gun sales (i.e., gun show sales). The *Concealed Weapons* measures whether people are allowed to carry loaded, concealed weapons and whether the police are required to issue permits (versus having some discretion). Finally, the *Background/Waiting* subscale pertains to the level of background check required by the state and whether a person must apply for a permit for handguns or long guns. Please see Appendix B for detailed descriptions of grading criteria. High scores

indicate more regulation and tighter controls and lower scores indicate a more favorable condition for gun rights.

Data Properties: Gun Access. The indicators of gun access were: Juvenile Possession, Juvenile Sales, Child Access Prevention (CAP), Child Safety Locks (CSL), Preemption/Attorney General regulations (P/AG), Secondary Sales (SES), Concealed Weapons (CCW), and Background/Waiting (B&W). The average grade point average for Juvenile Possession was 2.68 and the average for Juvenile Sales was 3.21. The Child Access subscale average was not as high, with an average of 1.07. The lowest grade point average for the subscales was for requiring safety locks (average g.p.a.=.696) indicating that most states agree that safety locks should not be required for

Table 7: Gun Access Scale Data Properties

					Mean	
	N	**Range**	**Minimum**	**Maximum**	**Statistic**	**S.E.**
Juvenile Possession	50	4.0	0.000	4.000	2.682	.173
Juvenile Sales	50	4.0	0.000	4.000	3.206	.144
Child Access Prevention (CAP)	50	4.0	0.000	4.000	1.068	.194
Child Safety Locks (CSL)	50	4.0	0.000	3.700	.696	.172
Preemption/Attorney General's power (P/AG)	50	4.0	0.000	4.000	1.170	.209
Secondary Sales (SES)	50	4.0	0.000	4.000	1.262	.216
Concealed Weapons (CCW)	50	4.0	0.000	4.000	1.460	.204
Background & Waiting (B&W)	50	4.0	0.000	4.000	1.566	.205
Valid N	50					

guns. The issue of Preemption (liability) and Attorney General's powers scored an average of 1.17. The last three subscales—Secondary Sales, Concealed Weapons, and

Background/Waiting—scored 1.26,1.46, and 1.57 respectively. Table 7 presents the ranges and standard errors for gun access data.The four main assumptions that are important for regression equations were tested for violations: linearity, multicollinearity, homoscedasticity, and normality. There were no missing data for any of the 50 states.

Visual inspection of the plots revealed a linear relationship for bivariate distributions. The distribution of cases was linear with regard to Juvenile Possession, Juvenile Sales, CAP, CSL, P/AG, SES, CCW, and B& W and there was a linear bivariate relationship between each variable and gun access, violence climate, and each of the four dependent suicide variables. The assumption of linearity was met for these data. Table 8 presents the zero-order correlation matrix for the subscales of the Gun Access Scale. Development and testing of the final Gun Access Scale is reviewed in Chapter VI.

Table 8: Correlation Matrix for Gun Access

	Juvenile Possess	Juvenile Sales	CAP	CSL	P/AG	SES	CCW
Juvenile Sales	.415**						
Child Access Prevention	.080	.217					
Child Safety Locks (CSL)	.391**	.298*	.491**				
Preemption/ Attorney General's Power (P/AG)	.002	.228	.275	.391**			
Secondary Sales (SES)	.463**	.387**	.453**	.765**	.469**		
Concealed Weapons (CCW)	.213	.382**	.445**	.454**	.569**	.546**	
Background & Waiting (B&W)	.471**	.401**	.461**	570**	.327**	.776**	.475**

*=p<.05 **=p<.01

There were a few issues with regard to skewness and kurtosis for the Gun Access Scale data. All of the subscales violated the skewness assumption except B&W: Juvenile

Possession (skew=-1.250, s.e.=0.337), Juvenile Sales (skew=-1.986, s.e.=.337), CAP (skew=.750, s.e.=0.337), CSL (skew=1.327, s.e.=0.337), P/AG (skew=1.010, s.e=0.337), SES (skew=.794, s.e.=0.337), and CCW (skew=0.634, s.e.=0.337). Two indicators, Juvenile Sales and B&W, violated the assumption for kurtotic normal distribution. The statistics for Juvenile Sales and B&W were (kurtosis=3.932, s.e.=.662) and (kurtosis=-1.537, s.e.=662). Visual inspection of the data histograms confirmed that although there are violations of the skewness and kurtosis assumptions, the degree is not marked enough to cause serious problems with the interpretation of findings. Also, the indicators were not used separately, but were combined in a factor analysis as a scale for the analyses. The skewness and kurtosis problems were largely eliminated for the Gun Access Scale. The distribution was only slightly skewed to the right for the factor score for the Gun Access Scale (skew=.775, s.e.=.337) and did not violate the normal distribution assumption for kurtosis (kurtosis=-0.348, s.e.=.662).

Visual inspection of plots for the data confirmed that the assumption of homoskedasticity for this data set was met. None of the plots revealed data that were outside the margin of error for heteroskedastisticity. The data have similar variance with regard to the errors across all levels of the predictors. Again, Nevada was a consistent outlier when plotted with the criterion. Two exceptions were the factor score for the Gun Access Scale when plotted with firearm suicide overall and elder gun suicide. The bivariate outliers were Arkansas, Louisiana, and Mississippi. All cases were considered in the analysis because the sample was too small to sacrifice one or two cases. Nevada was more than three standard deviations higher than the mean (when plotted with each of the criterion: total suicide, firearm suicide, elder suicide, and elder firearm suicide) for the

following Gun Access Scale variables: Juvenile Possession, Juvenile Sales, CAP, CSL, P/AG, SES, CCW, and B & W.

After investigating the bivariate correlations between all the predictors, it became clear that there were some problems with multicollinearity for the Economic Climate Scale and Status Integration. Most suicide research has investigated either economic variables or status integration variables and not both. Table 9 presents the zero-order correlation matrix for the indicators of economic climate and status integration. After exploring several options, the decision was made to exclude infant mortality, due to its low correlation with the other measures of economic climate. Disability and elder disability were highly correlated with the following economic measures: poverty, elder poverty, literacy, single-parent headed household, and education. Given the direction and strength of the relationships with the other economic climate and elder economic climate variables, disability was added to Economic Climate Scale and elder disability was added to the Elder Economic Climate Scale. Given the strength and direction of the relationship of Retirement with the economic variables and based on theoretical considerations, Retirement replaced Single-headed households for the Elder Economic Climate Scale. A retirement indicator makes more sense as a measure of elder economic climate than does the percentage of single-parent headed households, given the life situation of many elders. The final Economic Climate Scale included five indicators: poverty, literacy, education, disability, and single-parent households. The final Elder Economic Climate Scale also included five indicators: elder poverty, literacy, education, elder disability, and retirement.

The variables to be included as a measure of Status Integration were carefully considered based on theoretical and statistical information. The state level measure of

widowhood was inversely correlated with the percentage of males in each state (r=-.796). White collar was eliminated because it appears to be an inverse measure of economic climate, rather than being an indicator of status integration. The remaining variables—divorce, male, and widowhood—were entered into regression equations with the criterion to better understand the part and partial correlations with suicide overall.

Divorce (β=.501, t=5.185, $p < .001$) and male (β=.521, t=3.887, $p < .001$) were significant predictors of suicide, F (3, 46)=31.968, $p < .001$) even after controlling for the interaction effects of divorce, male, and widowhood in the equation. Widowhood's effects were trivial (β=.067, t =.538, p =.593) in the equation. The decision was made to exclude widowhood and include divorce and male as the two measures of Status Integration for the SEM models. The results for Economic Climate Scale, Elder Economic Climate Scale, and status integration are reviewed in Chapter V. The results of the full models using SEM are discussed in Chapter VIII.

Table 9: Zero-Order Correlation Coefficients for Economic Climate and Status Integration

	1	2	3	4	5	6	7	8	9	10	11	12
1. Male	1.000											
2. Divorced	.382**											
3. Widowed	-.796**	-.234										
4. White Collar	-.087	-.412**	-.194									
5. Retired	-.445**	.163	.588**	-.433**								
6. Disabled	-.478**	.242	.526**	-.522**	.852**							
7. Elder Disabled	-.143	.255	.071	-.560**	.581**	.721**						
8. Single Parent	-.488**	.069	.479**	-.420**	.749**	.791**	.713**					
9. Infant Mortality	.014	.147	.098	-.204	.064	.056	-.039	-.034				
10. Education	-.474**	.064	.491**	-.450**	.812**	.856**	.722**	.841**	-.007			
11. Literacy	-.556**	-.089	.517**	-.221	.762**	.781**	.570**	.831**	.015	.881**		
12. Poverty	-.200	.228	.333*	-.525**	.805**	.790**	.721**	.863**	.014	.775**	.673**	
13. Elder Poverty	-.430**	.019	.438**	-.455**	.630**	.797**	.762**	.908**	.008	.821**	.755**	.837**

*=p<.05 **=p<.01

Violence Climate

It has been demonstrated that suicide is strongly correlated with other types of violence: homicide, domestic battery, substance abuse (violence against self), and overall crime measures (Kowalski, Fauple, & Starr, 1987; Lester, 1989; Stolzenberg & D'Alessio, 2000). Research by Loftin and Hill (1974), Hackney (1969), Gastil. (1971), and Parker (1989) have worked to "disentangle" the economic factors from the subcultural factors as they relate to homicide. For example, Parker (1989) found that there is sufficient evidence to support the subculture of violence hypothesis, particularly when controlling for socioeconomic factors. Parker's work took the Gastil-Hackney hypothesis one step further by comparing the relationships of victims with offenders in order to better classify types of homicide and look for useful predictors (Parker, 1989). Urbanism has also been linked to various kinds of violence (Kowalski, et al., 1987), but the differences between rural and urban communities may be becoming less obvious due to improved education, increased communication, faster transportation (Kowalski et al., 1987), and electronic networks (Borgida et al., 2002).

The most comprehensive longitudinal study of violence has been conducted by Wollman and colleagues (1995, 2004). They have developed a framework for tracking national violence and harm in the United States. Although Wollman and colleagues have tracked national rates of violence, more information is needed about how each state's violence climate varies. The National Index of Violence And Harm [NIVAH] is comprehensive, including subscales for interpersonal violence (e.g., homicide, battery, and sexual assault), intrapersonal violence (e.g., suicide, and substance abuse), societal violence by the government, (e.g., capital punishment, and deaths by police intervention), societal violence by corporations (e.g., various kinds of pollution, and

product safety violations), societal violence by families (e.g., child abuse, and domestic violence), structural harm by societal neglect (e.g., lack of adequate health care, hunger, homelessness, and school drop outs), and other structural harm (e.g., infant mortality, hate crimes, gang membership, and income disparities) (Wollman et al., 2002).

Violence was conceptually defined as the use of force in order to harm someone else in pursuit of one's own ends. Violence for the present study is the use of physical harm against another person. The violence climate for the present study was measured using a modification of the NIVAH subscale, *interpersonal violence*. Wollman and colleagues' interpersonal violence subscale included the following measures: homicide, rape, battery, robbery, and reckless behavior (Wollman et al., 2002). The measure for reckless behavior includes arrests for weapons violations and driving under the influence of drugs or alcohol. Because the dependent variables were based on mortality data (and people who are dead cannot drive under the influence) and because the Gun Access Scale directly addressed the issue of firearms, the reckless behavior measure was omitted. The following indicators were pooled and used as a proxy for violence climate: homicide, rape, battery, and robbery. These measures were collected from the US Department of Justice Uniform Crime Reports (US Department of Justice, 2000). Measurement of homicide has largely been treated as one-dimensional (Parker, 1989) and was operationally defined in the present study as the number of deaths (adjusted for the population and given as a rate per 100,000 people) caused by another person. Rape, the act of forcing someone to commit a sexual act, was operationally defined as the number of rapes reported by each state to the US Department of Justice (2000) and adjusted for the population (reported as a number per 100,000 people). Similarly, robbery is conceptually defined as unlawfully taking the property of another person by

intimidation or force and was operationally defined as the number of robbery crimes committed and reported in 2000 (adjusted for the state population and standardized as a rate per 100,000 people). Finally, the conceptual definition of battery is the unlawful touching or striking of another person with the intention of bringing unwanted contact. Battery was operationally defined in the present study as the number of battery crimes committed and reported to the US Department of Justice for each state. The battery rates were adjusted for the state population and standardized as a rate per 100,000 people in 2000.

Data Properties: Violence Climate. The indicators of violence climate were: homicide, rape, battery, and robbery. There were no missing data for any of the 50 states. The average annual rate of homicide in the 50 states was 5.18 and the mean rate of robberies committed was 107.36 per 100,000 people. The average number of batteries committed in 2000 was 274.48 for every 100,000 people. Around 33.77 people reported being raped for every 100,000 people living in the United States. Table 10 presents the ranges and standard errors for violence climate data.

Linearity, multicollinearity, homoscedasticity, and normality assumptions were tested for violations in the violence climate data set. There were no missing data for any of the 50 states. Visual inspection of the plots revealed a linear relationship for bivariate distributions. The distribution of cases was linear with regard to

Table 10: Violence Climate Data Properties

	N	Range	Minimum	Maximum	Mean	
					Statistic	S.E.
Homicide	50	12.212	1.214	13.426	5.182	2.819
Rape	50	63.148	16.127	79.275	33.774	11.164
Battery	50	569.025	45.779	614.804	274.483	136.945
Robbery	50	247.299	8.720	256.019	107.367	61.674
Valid N	50					

homicide, robbery, rape, and battery and there was a linear bivariate relationship between each of those variables and gun access and each of the four dependent suicide variables. The assumption of linearity was met for these data. Because these indicators were combined as a scale, violation of the multicollinearity assumption was not an issue. Table 11 presents the correlation matrix for Violence Climate data. The development of the final scale is outlined in results Chapter VII and the full models are discussed in Chapter VIII.

Table 11: Violence Climate Correlation Coefficients

	Homicide	Robbery	Battery
Robbery	.636**		
Battery	.664**	.672**	
Rape	.101	.053	.339*

*=p<.05 **=p<.01

There was only one variable that violated the skewness and kurtosis assumptions for normal distribution of the violence climate data. Rape was positively skewed and the statistic revealed that it was more than the allowable limits (skew=1.434, s.e.=0.337). The Rape data violated the assumption of normality with regard to kurtosis (kurtosis=4.303, s.e.=.662). Visual inspection of the data histograms confirmed that

although there are violations of the skewness and kurtosis assumptions, the degree is not marked enough to cause serious problems with the interpretation of findings. All other variables (homicide, battery, and robbery) were normally distributed with regard to skewness and kurtosis. Also, the indicators were not used separately, but were combined in a factor analysis as a scale for the full analyses. The skewness and kurtosis problems were largely eliminated when the factor score was used to analyze the assumptions for the Violence Index. The distribution was only slightly skewed to the right for Violence Climate (skew=.390, s.e.=.337) and did not violate the normal distribution assumption. Similarly, the distribution did not violate the kurtosis assumption either (kurtosis=-0.569, s.e.=.662).

Visual inspection of plots for the data confirmed that the assumption of homoskedasticity for this data set was also met. None of the plots revealed data that were outside the margin of error for heteroskedastisticity. The data have similar variance with regard to the errors across all levels of the predictors. Again, Nevada was a consistent outlier when plotted with the criterion. The one exception was with the scatter plot for gun suicide overall, when plotted with homicide and battery. The outlier in those two cases was Alaska. All cases were considered in the analysis because the sample is too small to sacrifice one or two cases. Nevada was more than three standard deviations higher than the mean (when plotted with each of the criterion: total suicide, firearm suicide, elder suicide, and elder firearm suicide) for the following violence climate variables: homicide, robbery, battery, and rape.

Data Analysis

Structural equation modeling (SEM) is a popular statistical technique pioneered by Jöreskog in the early 1970s and is used for analyzing multiple variables in the social

and behavioral sciences (Jöreskog, 1973, Judd & Kenny, 1981) The basic idea of this advanced regression technique is that there is a causal structure underlying measured and hidden (latent) variables. This technique estimates the parameters of these linear combinations and measurement errors as well. A full discussion of SEM is outside the scope of this manuscript, but there are several key aspects that need to be addressed regarding this technique for the present study. First, the most frequently used form of SEM is based on the maximum likelihood estimation method (ML). *Analysis of Moment Structures* [AMOS] 5.0 (Arbuckle, 1997), a software program belonging to the SPSS family of programs can be set to analyze structural relationships with the ML, general least squares (GLS), and unweighted least squares (ULS) estimation and several others. ML estimation is recommended for large samples, around 10 cases per parameter estimated (Bentler & Yuan, 1999). Most studies that use SEM with ML estimation are based on sampling theory rather than samples that include the entire population being studied, as in this present study. Bentler and Yuan found in their Monte Carlo studies of small sampling SEM statistics[3], that ML method of estimation performed better than Browne's (1984) residual-based SEM statistic, which "behaves badly" with sample sizes below 120. While not ideal, ML estimation estimates can still be calculated with samples around 60 (Bentler & Yuan, 1999; Boomsa, 1982).

Partial least squares estimation is the recommended method for small samples (Abdi, 2003; Chin, 1998; Wold, 1981, 1985; Wold & Jöreskog, 1982). Soft modeling, as it is called, is most useful for causal modeling of a set of criterion from a high number of predictors. For example, it is possible to have one less predictor than

[3] PLS was not among the five estimation methods compared by Bentler and Yuan and is ideally suited for the small samples under comparison in their Monte Carlo study.

parameters estimated (Wold, 1981). This technique began in econometrics and has been used extensively in chemistry (Geladi, 1992), marketing (Fornell & Bookstein, 1982), education (Noonan, 1979) and political science (Frey, Dietz, & Kalof, 1992). PLS is well suited for small samples with large parameter estimates, but at the time of this study, the software production has not yet caught up with the statistical innovation. In other words, there is not yet a commercially available software package to compute covariance models using PLS estimation. "In general software publishers have fallen substantially behind the theoretical developments. For example, a distribution-free test developed by Browne about 15 years ago (Browne, 1982; Browne, Mels, & Coward, 1984) is not available in any extant computer program, including Browne's own program, RAMONA (Browne et al., 1994)" (Bentler & Dudgeon, 1996, pp. 566-7). With a lack of reliable studies based on population data with small numbers of comparison groups or cases and lack of computer software for PLS modeling, the ML estimation procedure was used for SEM of the present study. Factor analysis, multiple regression, logistic regression, and MANOVA were also used to analyze the data in this study.

CHAPTER IV: POLITICAL CLIMATE RESULTS

Several hypotheses were posed for political climate. There was an assumed hypothesis that the political climate data would strongly load on a single factor and that the scale would be a reliable measure of political participation or climate. The hypothesis was also made that the political climate scale was directly related to gun access in a positive direction. It was also hypothesized that political climate and violence were directly (positively) related with each other. Political climate was also hypothesized to have an indirect effect on suicide through gun access and violence climate. Before testing these hypotheses, the multivariate distributions were explored and the assumptions underlying the statistical tests were examined.

The multivariate testing of assumptions was performed for normal distribution, linearity, homoskedasticity, autocorrelation, factor analysis, and reliability of measurement. Multiple regression was performed in order to analyze the multivariate relationships of Political Climate as originally planned: Federal Election Commission Results, Ranney index, Ranney II index, FFL, FNRA, Partisanship, and Ideology. First, the normal multivariate distribution assumption was tested. Given that many of the univariate and bivariate distributions had skewness and kurtosis issues, it is not surprising that several of the multivariate distributions were skewed and kurtotic as well. The multivariate distributions that violated the normal distribution assumption was the Political Climate Scale with overall suicide (skew=2.158, s.e.=.337 and kurtosis=6.323, s.e.=.662), gun suicide (skew=1.424, s.e.=.337 and kurtosis=3.999, s.e.=.662), and elder suicide (skew=1.126, s.e.=.337 and kurtosis=2.234, s.e.=.662).

Second, the assumptions of multivariate linearity and homoskedasticity were tested. Visual inspection of the residual plots (standardized residuals plotted against

standardized predicted values) revealed a multivariate linear relationship of the political climate indicators with both mediating variables—gun access and violence climate—as well as the four criterion: suicide overall, gun suicide, elder suicide, and elder gun suicide. The residual plots also verified that the assumption of homoskedasticity was met for the political climate variables with the mediating and criterion variables. The residuals were randomly scattered around zero and demonstrated a relatively even distribution.

Third, the structure of the Political Climate Scale was investigated using exploratory factor analysis. Principle Components (PCA) factor analysis was used to compute the factor loadings for the political climate variables and to test the factor structure of the Political Climate Scale. The purpose of this sub-analysis was to determine if each of the seven indices were adequately measuring the latent variable Political Climate. Each of the political climate measures— Federal Election Commission Results, Ranney index, Ranney II index, FFL, FNRA, Partisanship, and Ideology—were entered into the model simultaneously using varimax rotation. The solution revealed a two factor structure as hypothesized: Partisanship and Gun Policy Climate. It is assumed in factor analysis that indicators of a latent construct are significantly correlated with each other. Two tests of these assumptions were conducted during the factor analysis of the Political Climate Scale: Kaiser-Meyer-Olkin and Bartlett's test. The Kaiser-Meyer-Olkin [KMO] measure of sampling adequacy measures the extent to which the variables in a factor analysis can be considered estimable, with a 1.0 indicating an errorless measurement or perfect scale. Any coefficient of .80 or higher is considered a good measure of sampling adequacy. The Bartlett's test of sphericity is a test of the correlations between the variables in a factor analysis, where the rejection of the null

hypothesis (that the indicators are more highly correlated than would be expected by chance) is desired. The KMO measure of sampling adequacy for the Political Climate Scale was .682 and the Bartlett's test was significant (χ^2 =366.036, p< .001). These analyses indicated that the items were significantly correlated, but there were some problems with sampling adequacy.

The factor analysis revealed a 10 factor solution with three main factors accounting for 79.91 percent of the total variance. The scree plot revealed a steep grade between the first, second, and third factors, with a dramatic flattening after the third factor. The fourth factor, with an eigenvalue of .754, explained another 7.54 percent of the total variance and the remaining factors explained from .68 to 4.05 percent of the remaining variance. Factors containing less than 5 percent of the variance are considered trivial (Nunnally & Bernstein, 1994) and are likely due to measurement error rather than substantive parts of the scale. Inspection of the rotated component matrix revealed a few unexpected results. The loadings conformed to the hypothesized scales: Partisanship, Interparty Competition, and Gun Rights Climate. See Table12 for the rotated factor loadings of the Political Climate Scale. It was hypothesized that

Table 12: Rotated Component Matrix (Political Climate)

	Component		
	1	2	3
Federal Election Commission 2000	**.849**	-.084	.428
Federal Election Commission 1996	**.673**	-.014	.114
Federal Election Commission 1992	**.912**	.156	-.068
Federal Election Commission 1988	**.842**	-.065	.026
Ranney	.368	**.871**	-.089
Ranney II	-.078	**.928**	-.226
Federal Firearm Licensures	.158	-.204	**.847**
Friends of the National Rifle Association	.102	-.060	**.873**
Partisanship	-.015	**.946**	-.031
Ideology	**-.841**	-.045	-.174

Federal Election Commission 2000, Federal Election Commission 1996, Federal Election Commission 1992, Federal Election Commission 1992, and Partisanship would load on the Partisanship subscale with Ranney and Ranney II loading on the Interparty Competition subscale, and the remaining indicators—FFL, FNRA, and Ideology—would load together to form a subscale for Gun Rights Climate. Instead, Ideology loaded with a negative factor loading on the Partisanship subscale. In hindsight, this makes sense, because the measure was coded as -1=liberal and those who voted for the Republican candidate in the 2000, 1996, 1992, and 1988 elections would have been more likely to call themselves "conservative" which was coded as "1." It was also surprising that Partisanship did not load on the Partisanship subscale, but with the Interparty Competition subscale instead. In hindsight, this also makes sense, because the Erikson, Wright, and McIver (1993) measure was a coefficient based on large,

random samples that were coded for party membership (-1 =Democrat, 0=Independent, 1=Republican). This measure could easily be a scale of interparty competition at the point of sampling, rather than over time, as was the case for the Ranney and Ranney II indices. Before venturing further into the scale issues, the Political Climate Scale was analyzed for internal consistency reliability.

Estimates of internal consistency reliability were computed for the full Political Climate Scale. The results were disappointing and pointed to serious problems with the Political Climate Scale. The Political Climate Scale, as originally hypothesized, yielded an alpha of .006, an obvious problem, with no item significantly improving the reliability. It was at this point, that the full Political Climate Scale was discarded. Further exploration revealed the most reliable measure of Political Climate Scale-Revised [PCS-R]: a combination of Ranney and Ranney II indices. The KMO measure of sampling adequacy for Political Climate Scale [PCS-R] was .500 and the Bartlett's test was significant (χ^2 =41.698, p< .001). These analyses indicated that the items were significantly correlated, but there were some problems with sampling adequacy. The principle components factor analysis of the Political Climate Scale-Revised revealed a one-factor solution which explained 88.22 percent of the total variance. The alpha for Political Climate Scale-Revised was .83, which is consistent with previously reported reliability alphas for the Ranney Index. The Ranney index has been reported as having a reliability ranging from α=.77 (Holbrook & Van Dunk, 1993) to α=.87 (Bibby & Holbrook, 1996), indicating a satisfactory level of reliability (Nunnelly & Bernstein, 1994). The inter-item correlation was .882 for the present study, also indicating a satisfactory level of inter-item reliability. Please see Table 13 for the loadings, communalities, means, and standard deviations of the Political Climate Scale-Revised.

Table 13: Component Matrix (PCS-R)

	Factor loading	h^2	*M*	*SD*
Ranney	**.939**	.882	.561	.257
Ranney II	**.939**	.882	.643	.169

Federal Election Commission 2000, Federal Election Commission 1996, Federal Election Commission 1992, and Federal Election Commission 1988 were also combined in a subscale: Federal Election Commission-Revised. Principle components factor analysis with varimax rotation was used to obtain the regression scores for the Federal Election Commission-Revised. The KMO measure of sampling adequacy for Federal Election Commission-Revised was .774 and the Bartlett's test was significant (χ^2 =98.18, p< .001). These analyses indicated that the items were significantly correlated for use in the factor analysis. The analysis revealed a one-factor solution that explained 71.19 percent of the total variance in the Federal Election Commission data. The reliability alpha for Federal Election Commission-Revised was .84, the scale mean was .464 and the variance was .006. The inter-item mean correlation was .708. Table14 presents the factor loadings, communalities, means, and standard deviations of the Political Climate Scale. The Political Climate Scale-Revised and Federal Election Commission-Revised were selected for analysis in the final SEM models and the results are outlined in Chapter VIII.

The findings of Federal Election Commission-Revised support the hypothesis that the data from the 1988, 1992, 1996, and 2000 elections were similar enough to use as a single scale of partisanship. The hypotheses were also tested about the strength and direction of the relationship of the Federal Election Commission-Revised scale with gun access. It was hypothesized that as the percentage of Republican voters in each

Table 14: Component Matrix (Federal Election Commission-Revised)

	Factor loading	h^2	*M*	*SD*
Federal Election Commission 2000	**.898**	.807	.504	.087
Federal Election Commission 1996	**.735**	.540	.423	.070
Federal Election Commission 1992	**.890**	.792	.382	.050
Federal Election Commission 1988	**.842**	.709	.545	.055

state increased, the access to guns would increase, because Republicans tend to support gun rights legislation. This hypothesis was strongly supported for these data. Federal Election Commission-Revised had a strong direct effect on gun access, in that for every unit increase in the percent of people voting Republican, the Gun Access Scale-Revised decreased more than a half a letter grade (-.547). In other words, as the percentage of people who voted Republican in the last four Presidential elections increased in each of the 50 states, the gun laws became more lenient.

The indirect effects of political climate on gun access were also pronounced, further supporting the hypothesis that political climate was an important factor in state gun access and suicide rates. The indirect effects of political climate (by influencing the gun laws) on suicide, gun suicide, elder suicide, and elder gun suicide were significant: 18.5 percent, 30.5 percent, 21.9 percent, and 15.8 percent, respectively. These indirect effects were much higher than any of the other individual predictors, but not quite as high as the direct effects of gun access on suicide, gun suicide, elder suicide, and elder gun suicide. This finding is important, because it helps to shed some light on which of the variables were the most important in the predictive models.

Partisanship (a strongly Republican voting state) was a significant contributor to the gun laws, which was a significant predictor of suicide, gun suicide, elder suicide, and elder gun suicide. No other independent predictor was as helpful for explaining the differences in gun access or suicide rates.

CHAPTER V: ECONOMIC CLIMATE SCALE & STATUS INTEGRATION RESULTS

It was hypothesized that the indicators of economic climate would comprise one scale and that the measures of status integration would form another scale. Economic climate, as a scale, was hypothesized to have a direct, positive, effect on violence climate and an indirect effect on suicide rates by its influence on gun access and violence climate. In addition, status integration had a hypothesized direct, inverse effect on violence climate and suicide. Status integration was also hypothesized to have an indirect effect on suicide rates through its influence on gun access and violence climate. The properties of the multivariate distributions were investigated, followed by the assumptions of the statistical tests.

Before testing the hypotheses, the multivariate testing of assumptions was performed for normal distribution, linearity, homoskedasticity, autocorrelation, factor analysis, and reliability of measurement for the Economic Climate Scale and Status Integration indicators. First, the normal multivariate distribution assumption was tested. Given that many of the univariate and bivariate distributions had skewness and kurtosis issues, it is not surprising that several of the multivariate distributions were skewed and kurtotic as well. The multivariate distributions that violated the normal distribution assumption was Elder Economic Climate Scale with elder suicide (skew=1.244, s.e.=.337 and kurtosis=2.072, s.e.=.662) and Elder Economic Climate Scale with elder gun suicide (skew=1.493, s.e.=.337 and kurtosis=3.157, s.e.=.662). The multivariate distributions for Economic Climate Scale with all mediators and criterion are normally distributed.

Second, the assumptions of multivariate linearity and homoskedasticity were tested. Visual inspection of the residual plots (standardized residuals plotted against

standardized predicted values) revealed a multivariate linear relationship of Economic Climate Scale and Elder Economic Climate Scale variables with both mediating variables—gun access and violence climate—as well as the four criterion: suicide overall, gun suicide, elder suicide, and elder gun suicide. The residual plots also verified that the assumption of homoskedasticity was met for the Economic Climate Scale and Elder Economic Climate Scale variables with the mediating and criterion variables. The residuals were randomly scattered around zero and demonstrated a relatively even distribution.

Third, the structure of the Economic Climate Scale was investigated using exploratory factor analysis. Principle Components (PCA) factor analysis was used to compute the factor loadings for the Economic Climate Scale variables and to test the factor structure of Economic Climate Scale. The purpose of this sub-analysis was to determine if each of the five indices were adequately measuring the latent variable Economic Climate. Each of the Economic Climate Scale measures—poverty, literacy, education, single parenthood, and disability—were entered into the model simultaneously using varimax rotation. The solution revealed a one-factor structure as hypothesized and this one factor explained 84.70 percent of the variance. See Table 15 presents the factor loadings for the Economic Climate Scale. Two tests of the factor analysis assumptions were also conducted: Kaiser-Meyer-Olkin and Bartlett's test. The Kaiser-Meyer-Olkin [KMO] measure of sampling adequacy measures the extent to which the variables in a factor analysis can be considered estimable, with a 1.0 indicating an errorless measurement or a perfect scale. Any coefficient of .80 or higher is considered a good measure of sampling adequacy. The Bartlett's test of sphericity is a test of the correlations between the variables in a factor analysis, where the rejection of the null

hypothesis (that the indicators are more highly correlated than would be expected by chance) is desired. The KMO measure of sampling adequacy for Economic Climate Scale was .739 and the Bartlett's test was significant (χ^2 =204.582, p< .001).

Table 15: Component Matrix (Economic Climate Scale)

	Factor loading	h^2	*M*	*SD*
Single parent	**.941**	.885	.043	.014
Education	**.947**	.897	.180	.044
Literacy	**.906**	.821	.179	.046
Poverty	**.890**	.792	.116	.030
Disability	**.917**	.840	.191	.028

The examination of the scree plot further validated the one-factor solution for the Economic Climate Scale. These analyses indicated that the items were significantly correlated and comprised an adequate scale when used together.

The factor analysis of Elder Economic Climate Scale also revealed a one-factor solution accounting for 78.60 percent of the total variance. The scree plot revealed a steep grade between the first, second, and third factors, with a dramatic flattening after the third factor. The fourth factor, with an eigenvalue of .754, explained another 7.54 percent of the total variance and the remaining factors explained from .68 to 4.05 percent of the remaining variance. Factors containing less than 5 percent of the variance are considered trivial (Nunnally & Bernstein, 1994) and are likely due to measurement error rather than substantive parts of the scale See Table 16 for the factor loadings, communalities, means, and standard deviations of the Elder Economic Climate Scale.

Table 16: Component Matrix (Elder Economic Climate Scale)

	Factor loading	h^2	*M*	*SD*
Retirement	**.854**	.730	.350	.036
Education	**.960**	.921	.180	.044
Literacy	**.901**	.811	.179	.046
Elder poverty	**.897**	.804	.094	.027
Elder Disability	**.815**	.664	.422	.045

Estimates of internal consistency reliability were computed for the Economic Climate Scale and Elder Economic Climate Scale. The Economic Climate Scale yielded an alpha of .917, with no item significantly improving the reliability. The alpha for Elder Economic Climate Scale was .921, which is consistent with previously reported reliability alphas for the Structural Poverty Index (Loftin & Hill, 1974). The Structural Poverty Index has been reported as having a reliability ranging from α=.77 (Holbrook & Van Dunk, 1993) to α=.87 (Bibby & Holbrook, 1996), α=.846 (Loftin & Hill, 1974) to α=.893 (Parker & Smith, 1979) indicating a satisfactory level of reliability. The correlations of Loftin and Hill's (1974) measure with the ones used in the present study were very strong; Economic Climate Scale (α=.994) and Elder Economic Climate Scale (α=.981). The mean inter-item correlation for Economic Climate Scale was .847 and for the Elder Economic Climate Scale was .784. The results of the full model are discussed in Chapter VIII.

As was hypothesized, the indicators of economic climate did comprise one scale, but the indicators of status integration did not. One surprising finding from this study was how strongly the economic and status integration measures were related to

each other. This leads to some interesting questions about status integration theory and suicide, particularly about the economic consequences of status. The data suggest that states that have higher percentages of males do much better economically (hence the negative correlations with the Economic Climate Scale and Elder Economic Climate Scale, which essentially measure poverty.) One of the dangers of aggregate data is in making assumptions about individual-level phenomena. This is not to say that males make more money than women, rather that states with higher numbers of males tend to have less poverty when comparing education, literacy, disability, elder disability, single-headed households, retirement, poverty, and elder poverty.

Economic climate and Elder Economic Climate, as separate scales, were hypothesized to have a direct, positive, effect on violence climate and an indirect effect on suicide rates (by its influence on both gun access and violence climate). These hypotheses were supported by these data. The direct effect of poverty on violence was significant, explaining anywhere from 40.2 percent to 61.2 of the differences in violent crimes from state to state (depending on the dependent variable in the model: suicide, gun suicide, elder suicide, or elder gun suicide). Poverty was also a significant predictor of suicide, gun suicide, elder suicide, and elder gun suicide because of the influence of poverty on violence climate and gun access (i.e., indirect effects). For each of the criterion—suicide, gun suicide, elder suicide, and elder gun suicide—the indirect effects on violence was 7.5 percent, 18.1 percent, 19.2 percent, and 14.8 percent, respectively. Poverty had the biggest indirect effects on gun suicide and elder suicide. This can be interpreted, for example, that 19.2 percent of the differences in elder suicide rates from state to state is influenced by the levels of education, literacy, disability,

elder disability, single-headed households, retirement, poverty, and elder poverty in each state.

In addition, status integration had a hypothesized direct, inverse effect on violence climate and suicide, but this was not supported by these data. This is due partly to measurement problems that did not allow for a scale of status integration. Individual measures of status (divorce and gender) were significant predictors of suicide, gun suicide, elder suicide, and elder gun suicide, but not violence climate. It was interesting to note how important states with higher divorce rates and states with higher percentages of males were in the prediction of suicide. The direct effects of divorce on suicide, for example, was 35.2 percent; this means that 35.2 percent of the differences in suicide rates were explained by the rates of divorce in each state. States with higher rates of divorce also had significantly higher rates of suicide, even when controlling for gender, poverty, gun access, and other kinds of violence. This was true for gun suicide, elder suicide, and elder gun suicide, explaining 29.6 percent, 36.0 percent, and 35.2 percent of those differences, respectively. Status integration was also hypothesized to have an indirect effect on suicide rates through its influence on gun access and violence climate.

As it happened, this hypothesis was partly supported because divorce rates had a strong influence on gun access, but not violence climate. Again, states with higher rates of divorce had significantly higher rates of suicide, gun suicide, elder suicide, and elder gun suicide through the influence on gun access. The indirect effects of divorce on gun access (possibly due to a latent variable that was not measured, such as legal or judicial factors) were significant; 13.8 percent, 21.1 percent, 16.2 percent, and 11.7 percent of the differences in suicide, gun suicide, elder suicide, and elder gun suicide were

explained by the indirect effects of divorce, respectively. Additional findings about the full models are discussed in Chapter VIII.

CHAPTER VI: GUN ACCESS RESULTS

Gun access was hypothesized to have a direct effect on violence climate, and a direct, positive effect on suicide. It was also hypothesized that the indicators of gun access would load for one scale and that the scale would be a reliable measure of the gun laws in each state. In other words, it was hypothesized that less restrictive gun laws would lead to higher rates of violence and higher rates of suicide. It was assumed that the multivariate distributions would be normally distributed and the tests of those assumptions were made as well.

The multivariate testing of assumptions was performed for normal distribution, linearity, homoskedasticity, autocorrelation, factor analysis, and reliability of measurement. Multiple regression was performed in order to analyze the multivariate relationships of Gun Access as originally planned: Juvenile Possession, Juvenile Sales, Child Access Prevention (CAP), Child Safety Locks (CSL), Preemption/Attorney General regulations (P/AG), Secondary Sales (SES), Concealed Weapons (CCW), and Background/Waiting (B&W). First, the normal multivariate distribution assumption was tested. Given that many of the univariate and bivariate distributions had skewness and kurtosis issues, it is not surprising that several of the multivariate distributions were skewed and kurtotic as well. All four of the multivariate distributions violated the normal distribution assumption when regressed with The Gun Access Scale because they were skewed to the left significantly: suicide (skew=-1.086, s.e.=.337), gun suicide (skew=-1.005, s.e.=.337), elder suicide (skew=- .968, s.e.=.337), and elder gun suicide (skew=-1025, s.e.=.337). None of the multivariate distributions had problems with kurtosis and were neither too peaked nor too flat. Interestingly, when The Gun Access Scale (the factor scores) was used in the regression equations instead of each individual

indicator, the distributions were identical for each of the dependent variables (skew=-.901, s.e.=.337; kurtosis=-.348, s.e.=.662). This is likely due to the fact that suicide overall includes firearm suicide, elder suicide, and elder gun suicide. The only exception was the distribution of the error terms for the full model with elder suicide (skew=-.818, s.e., .337; kurtosis=2.944, s.e.=.662). In other words, when all the variables were included in the analysis, the assumption of normality was maintained for each of the full models.

Second, the assumptions of multivariate linearity and homoskedasticity were tested for the Gun Access Scale. Visual inspection of the residual plots (standardized residuals plotted against standardized predicted values) revealed a multivariate linear relationship of Political Climate variables with both mediating variables—Gun Access and Violence Index—as well as the four criterion: suicide overall, gun suicide, elder suicide, and elder gun suicide. The residual plots did demonstrate a problem with heteroskedasticity when gun access was analyzed without other variables in the model, but the problem does not present itself when the factor scores for gun access was used as a scale in the various models. Note Figure 2 where the individual indicators of the gun access data are used in a regression equation with the criterion (suicide overall) and Figure 3 where the factor scores were used for gun access as a scale in the full model The plots for each of the criterion were visibly clustered. The residuals were randomly scattered around zero and demonstrated a relatively even distribution.

Third, the structure of the Gun Access Scale was investigated using factor analysis. Principle Components (PCA) factor analysis was used to compute the factor loadings for the gun access variables and to test the factor structure of gun access. The purpose of this sub-analysis was to determine if each of the seven indices were adequately measuring the

latent variable Gun Access. Each of the gun access measures—Juvenile Possession, Juvenile Sales, CAP, CSL, P/AG, SES, CCW, B&W—were entered into the model simultaneously using varimax rotation. The solution revealed a two factor structure as hypothesized: Child Access and Gun Access. It is assumed in factor analysis that indicators of a latent construct are significantly correlated with each other. Two tests of these assumptions were conducted during the factor analysis of gun access. Kaiser-Meyer-Olkin and Bartlett's test. The Kaiser-Meyer-Olkin [KMO] measure of sampling adequacy measures the extent to which the variables in a factor analysis can be considered estimable, with a 1.0 indicating an errorless measurement or perfect scale. Any coefficient of .80 or higher is considered a good measure of sampling adequacy. The Bartlett's test of sphericity is a test of the correlations between the variables in a factor analysis, where the rejection of the null hypothesis (that the indicators are more highly correlated than would be expected by chance) is desired. The KMO measure of sampling adequacy for gun access was .794 and the Bartlett's test was significant (χ^2 =172.65, $p<$ .001). These analyses indicated that the items were significantly correlated and satisfactory for use together in a factor analysis.

The exploratory factor analysis revealed an eight-factor solution with two main factors accounting for 64.72 percent of the total variance. The scree plot revealed a steep grade between the first and second factors, with a dramatic flattening after the third factor. The third factor, with an eigenvalue of .839, explained another 10.49 percent of the total variance and the remaining factors explaining from 1.84 to 8.42 percent of the remaining variance explained. See Table 17 for the rotated component matrix of the Gun Access Scale.

Figure 2: Gun Access and Elder Gun Suicide

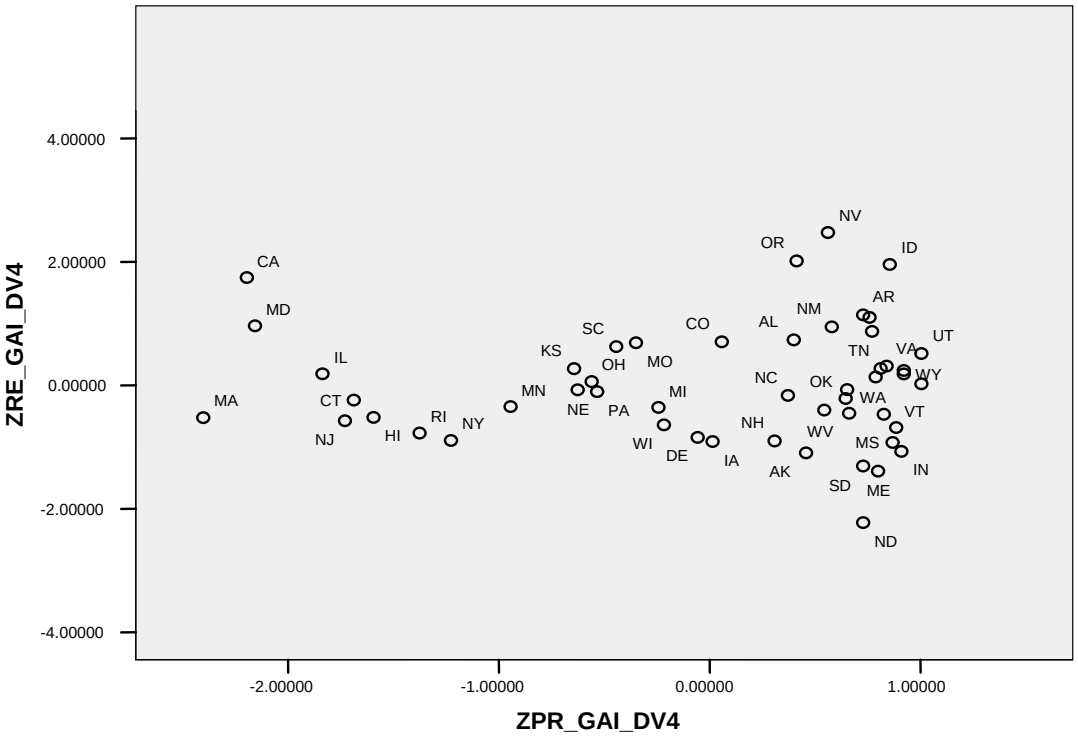

Figure 3: Gun Access and Full Model

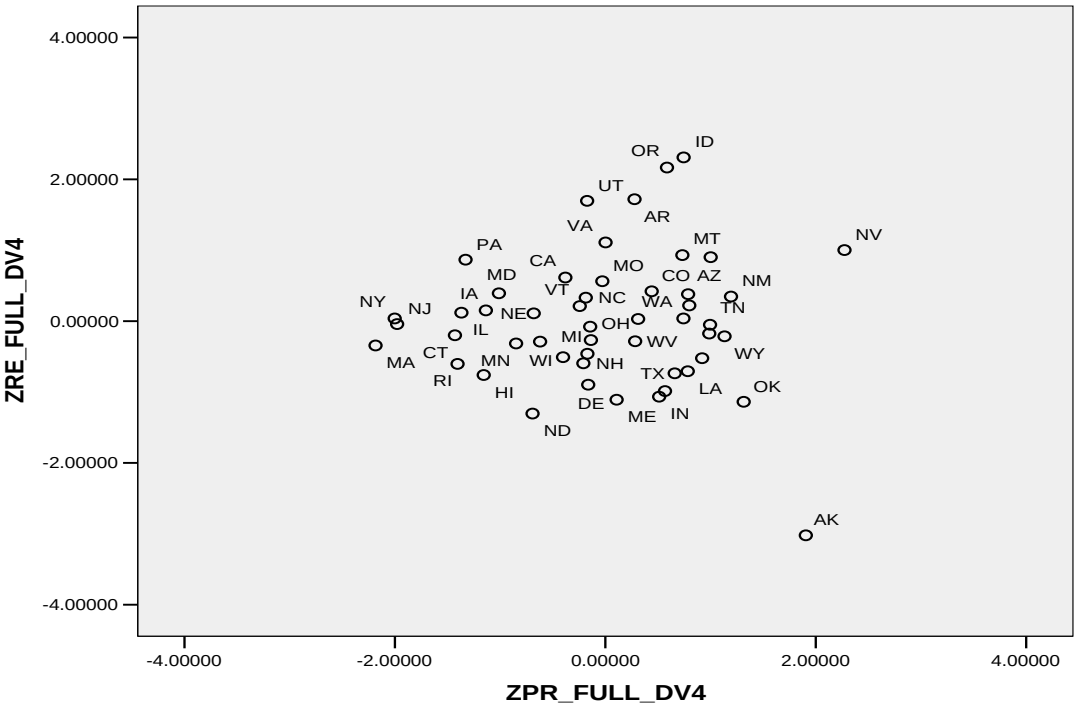

Table 17: Rotated Component Matrix (Gun Access Scale-Revised)

	Component	
	1	2
Juvenile Possession	.524	**.729**
Juvenile Sales	**.565**	.337
Child Access Prevention (CAP)	**.616**	-.321
Child Safety Locks (CSL)	**.804**	-.001
Preemption/Attorney General's Power (P/AG)	**.579**	-.562
Secondary Sales (SES)	**.897**	.056
Concealed Weapons (CCW)	**.732**	-.329
Background & Waiting (B&W)	**.824**	.170

Child Access was eliminated because it did not improve the overall model and was not a statistically significant predictor of suicide. Gun Access Scale and Child Access were entered into a regression model with the criterion and the other predictors to better understand the part and partial correlations with suicide overall. Gun Access Scale(β=- .355, t= -3.522, p < .001), divorce (β=.327, t=3.514 , p < .001), and male (β=.433, t=4.378, p < .001) were significant predictors of suicide, F (6, 43)=24.532, p< .001) even after controlling for the interaction effects of divorce, male, Violence Index, Economic Climate Scale, Gun Access Scale, and Child Access in the equation, whereas Child Access effects were trivial (β=.095, t=-1.099, p=.278). The decision was made to exclude Child Access and use Gun Access Revised (Gun Access-Revised). A second factor analysis was conducted to better understand the factor structure of Gun Access Scale-Revised. The KMO and Bartlett's test of sphericity were .779 and (χ^2 =140.22, p< .001), respectively. The assumptions of factor analysis were upheld for the Gun Access Scale-Revised. The exploratory factor analysis revealed a 6-factor solution with

one main factor accounting for 58.8 percent of the total variance. The scree plot revealed a steep grade between the first and second factors, with a dramatic flattening after the second factor. The second factor, with an eigenvalue of .852, explained another 14.2 percent of the total variance and the remaining factors explaining from 2.45 to 10.87 percent of the remaining variance explained. See Table 18 for the component matrix of the Gun Access Scale-Revised.

Estimates of internal consistency reliability were computed for the Gun Access Scale and the Gun Access Scale-Revised. The Gun Access Scale and Gun Access Scale-Revised yielded alphas of .848 and .855 respectively, which further supported dropping the Gun Access Scale in favor of the Gun Access Scale-Revised. The mean inter-item correlation for the Gun Access Scale-Revised was .603. See Table 18 for the factor loadings of the Gun Access Scale-Revised. The Gun Access Scale-Revised mean was 1.204 and the variance was .096.

Table 18: Component Matrix (Gun Access Scale-Revised)

	Factor loading	h^2	*M*	*SD*
Child Access (CAP)	**.667**	.445	1.068	1.374
Child Safety Locks (CSL)	**.815**	.665	.696	1.218
Preemption/Attorney General's power (P/AG)	**.638**	.407	1.170	1.480
Secondary Sales (SES)	**.894**	.799	1.262	1.527
Concealed Weapons (CCW)	**.752**	.565	1.460	1.440
Background &Waiting (B& W)	**.804**	.646	1.566	1.451

As hypothesized, gun access was found to have a direct effect on violence climate, and a direct, positive effect on suicide. These hypotheses were strongly supported by the data. Gun access had a strong direct effect on suicide, gun suicide, elder suicide, and elder gun suicide; the scale explained 27.7 percent, 39.9 percent, 41.8 percent and 41.8 percent of the differences, respectively. This was an important finding which demonstrated that states that do not require child safety locks (CSL), do not hold parents liable for limiting access of their guns for their children (CAP), that prohibit cities from passing more strict laws than the state (P/AG), have no limits on secondary sales (SES), allow concealed weapons (CCW), and have loose background checks and waiting periods (B&W) have significantly higher suicide rates, gun suicide rates, elder suicide rates, and elder gun suicide rates. The Gun Access Scale-Revised was found to be a reliable measure and the multivariate assumptions of factor analysis and the multivariate distributions were supported by the tests and these data. It is important to remember when looking at the coefficients for the full model (See Figures 5, 8, 11, and 14 for the direct effects and regression weights) that (Gun Access Scale-Revised) was coded so that *higher scores* on the Gun Access Scale-Revised were indicative of *higher regulations* and *more gun control*. An inverse relationship is counter-intuitive, but indicative of easier access. The hypothesis stating the direction and strength of the relationship of gun access and suicide was supported by these data for these models.

In other words, it was hypothesized that less restrictive gun laws would lead to higher rates of violence, but these data suggest that states with higher levels of violence leads to lenient gun laws. In states where there is more violence, the legislature passed laws to allow easier access to guns. The demand for easier access is higher in states where there is more violence; states with higher rates of violence had less restrictive

gun laws. The levels of violence led to easier access, rather than easier access leading to higher violence. Rates of violence explained 41.8 percent, 50.1 percent, 49.8 percent, and 49.8 percent of the differences in the gun access scale from state to state. States with higher rates of violence had significantly more lenient gun laws and states with lower rates of violence had much more strict gun laws. The direct and indirect results of violence climate are continued in the next section.

CHAPTER VII: VIOLENCE CLIMATE RESULTS

It was hypothesized that violence has a direct, positive effect on suicide and with gun access. It was also hypothesized that the indicators of violence—homicide, rape, battery, and robbery—would be highly correlated with each other and would form a single scale of violence that was reliable and loaded on one construct in a factor analysis. The multivariate distributions were assumed to be normally distributed, so the tests of those assumptions were performed to test these hypotheses. The multivariate testing of assumptions was performed for normal distribution, linearity, homoskedasticity, autocorrelation, factor analysis, and reliability of measurement. Multiple regression was performed in order to analyze the multivariate relationships of Violence Climate as hypothesized: homicide, battery, robbery, and rape. First, the normal multivariate distribution assumption was tested. Given that many of the univariate and bivariate distributions had skewness and kurtosis issues, it is not surprising that several of the multivariate distributions were skewed and kurtotic as well. The only equation that violated the multivariate normal distribution assumption for skewness or kurtosis was Violence Index with overall suicide (kurtosis=3.370, s.e.=.662). The other multivariate equations were normally distributed.

Second, the assumptions of multivariate linearity and homoskedasticity were tested. Visual inspection of the residual plots (standardized residuals plotted against standardized predicted values) revealed a multivariate linear relationship of the Violence Index with the Gun Access Scale-Revised well as the four criterion: suicide overall, gun suicide, elder suicide, and elder gun suicide. The residual plots also verified that the assumption of homoskedasticity was met for Violence Index with the mediating

and criterion. The residuals were randomly scattered around zero and demonstrating a relatively even distribution.

Third, the structure of the Violence Index was investigated using factor analysis. Principle Components (PCA) factor analysis was used to compute the factor loadings for the Violence Index and to test the factor structure of Violence Index. The purpose of this sub-analysis was to determine if each of the four indices were adequately measuring the latent variable Violence Climate. Each of the Violence Index measures—homicide, robbery, battery, and rape—were entered into the model simultaneously using varimax rotation. The solution revealed a two factor structure, contrary to what was hypothesized. It is assumed in factor analysis that indicators of a latent construct are significantly correlated with each other. Two tests of these assumptions were conducted during the factor analysis of Violence Index: Kaiser-Meyer-Olkin and Bartlett's test. The Kaiser-Meyer-Olkin [KMO] measure of sampling adequacy measures the extent to which the variables in a factor analysis can be considered estimable, with a 1.0 indicating an errorless measurement or perfect scale. Any coefficient of .80 or higher is considered a good measure of sampling adequacy. The Bartlett's test of sphericity is a test of the correlations between the variables in a factor analysis, where the rejection of the null hypothesis (that the indicators are more highly correlated than would be expected by chance) is desired. The KMO measure of sampling adequacy for the Violence Index was .666 and the Bartlett's test was significant (χ^2 =70.451, p< .001). These analyses indicated that the items were significantly correlated, but there were some problems with sampling adequacy.

The factor analysis revealed a four factor solution with two main factors accounting for 84.5 percent of the total variance. The scree plot revealed a steep grade

between the first and second factors, with a dramatic flattening after the third factor. The third factor, with an eigenvalue of .364, explained another 9.11 percent of the total variance and the remaining factor explaining 6.39 percent of the remaining variance. Inspection of the rotated component matrix revealed unexpected results. The loadings conformed to two separate scales rather than one. See Table 19 for the rotated factor loadings of Violence Index.

Table 19: Rotated Component Matrix (Violence Index)

	Component	
	1	2
Homicide	**.877**	.028
Robbery	**.892**	-.041
Battery	**.844**	.349
Rape	.064	**.987**

Before venturing further into the scale issues, the Violence Index was analyzed for internal consistency reliability.

Estimates of internal consistency reliability were computed for the full Violence Index. The Violence Index, as originally hypothesized, yielded an alpha of .490, an obvious problem, with no item significantly improving the reliability. It was at this point, the full Violence Index was discarded and two other options were explored. Because rape was the only item that did not load with the others in the exploratory factor analysis, a second factor analysis was performed with homicide, battery, and robbery. The KMO for this scale was .731 and the assumption of sphericity was upheld (χ^2 =61.631, p< .001). The reliability was still too low, however, with an inter-item alpha of .523. The Uniform Crime Reports Index of Violent Crime was explored next. This measure is a composite of the four indicators highlighted previously, but reported as a total number of violent crimes

(adjusted for the population) in each state. In other words, the Violence Index 2000 is the total number of homicides, robberies, batteries, and rapes in each state (US Department of Justice, 2001). Rather than measuring each as an indicator, they were used as one observed measure of violent crime. This measure has been used widely since 1989 and is a product of the Federal Bureau of Investigation's quest for a reliable set of criminal statistics (US Department of Justice, 2004). When compared with several years of US Department of Justice indices, the reliability of the Violence Index-R was high (α=.976) and was, of course, highly correlated with the two factor scores of Violence Index: Factor 1 (α=.871, $p < .001$) and Factor 2 (α=.270, $p < .01$). The correlation with Violence Index-R was also high (α=.903, $p < .001$).

The multivariate assumptions were tested again with Violence Index 2000 and the other variables for the partial and full models. All multivariate distributions for the partial and full models were normally distributed for skewness and kurtosis. The assumptions of multivariate linearity and homoskedasticity were also tested. Visual inspection of the residual plots (standardized residuals plotted against standardized predicted values) revealed a multivariate linear relationship of Violence Index 2000 variables with the Gun Access Scale-Revised well as the four criterion: suicide overall, gun suicide, elder suicide, and elder gun suicide. The residual plots also verified that the assumption of homoskedasticity was met for Violence Index with the mediating and criterion and there did not appear to be a problem with the partial plots either. The residuals were randomly scattered around zero and demonstrating a relatively even distribution.

Both Violence Index-R and Violence Index 2000 performed well in the regression equations with the variables from the full model, so it was decided that Violence Index 2000 would be retained for the full model analysis. This decision was based on the higher

reliability over time (α=.976) and the fact that it includes slightly more information about violent crime (i.e., rape). The regression model with the criterion Gun Access Scale-Revised was statistically significant F (4, 45)=21.076, p< .001). Divorce (β=-.391, t=-4.305, p < .001), Federal Election Commission-Revised (β=-.526, t=-5.806, p < .001), Economic Climate Scale (β=-.266, t=-2.737, p < .001) and Violence Index 2000 (β=.402, t=4.131, p < .001) were significant predictors of suicide.

Multiple regression equations performed with each indicator of Economic Climate Scale and Elder Economic Climate Scale with the criterion Violence Index-R helped tease out the most significant parts of the Economic Climate Scale and Elder Economic Climate Scale. For the general population, literacy (β=-.816, t=-2.984, p=.005) and poverty (β=.771, t=3.033, p=.004) were the most significant predictors of violence. The overall regression equation found that the indicators of economic climate were significant predictors of violence climate F (5, 44)=6.976, R^2 =.442 p< .001). Similarly, the individual indicators of elder economic climate were significant predictors of violence climate, F (5, 44)=6.673, R^2 =.431, p< .001), with literacy (β=- .840, t=3.258, p=.002), retirement (β=.434, t=2.170, p=.035), and elder disability (β=.981, t=4.034, p < .002), being the most influential predictors in the equation.

It was hypothesized that the indicators of violence—homicide, rape, battery, and robbery—would be highly correlated with each other and would form a single scale of violence that was reliable and loaded on one construct in a factor analysis. This hypothesis was partly supported by these data. The best measure of violence was the measure of homicide, rape, battery, and assault together. Although homicide, battery, and assault did work well together as a single scale, it was not reliable enough for the final analyses. It was also hypothesized that violence has a direct, positive effect on suicide

and with gun access and an indirect, positive effect on suicide. These hypotheses were supported by these data. The relationship of gun access and violence was discussed in Chapter VI, so those results are not repeated. The direct effects of violence on suicide and indirect effects of violence (through gun access) on suicide were interesting and supported the original hypotheses. States with higher rates of violence had higher rates of suicide, gun suicide, elder suicide, and elder gun suicide. The strength of this relationship was much higher than would be expected by chance, except in the case of suicide overall (the other paths from Violence Index-R to gun suicide, elder suicide, and elder gun suicide were all statistically significant, $p < .001$.)

The hypothesis pertaining to the indirect relationship of violence (through gun access) and suicide, gun suicide, elder suicide, and elder gun suicide was also supported. The variance explained by the indirect effects of state levels of violence ranged from 14.2 percent (for suicide) to 27.4 percent (gun suicide). This means that states with higher rates of violence have higher rates of suicide because of the effect higher violence has on gun access. Conversely, states with lower rates of violence have lower rates of suicide, due in part to the more rigorous gun laws. Additional results of the full models using SEM are discussed in the following chapter and those implications for each hypothesis are discussed in the final chapter.

CHAPTER VIII: RESULTS OF THE FULL MODELS

A two-step process recommended by Anderson and Gerbing (1988) was used to test the mediational models of suicide. First, confirmatory factor analyses (CFA) were performed to develop an acceptable measurement model, followed by the testing of the structural model. This chapter focuses on the SEM analyses for each of the hypothetical models of suicide: suicide overall, gun suicide, elder suicide, and elder gun suicide.

Model I: Suicide Overall

It was hypothesized that the structural model with the predictors male, divorce, Federal Election Commission-Revised, PCS-R, and Elder Economic Climate Scale and with the mediators Gun Access Scale-Revised, and Violence Index-R was a good fit for the data with the criterion suicide. In other words, that the hypothesized variables had a strong linear effect on suicide rates in 2000 and that, when combined in a system of regression equations, these seven variables would be able to predict elder suicide rates better than a model with perfect correlations among the variables and much better than a model with no relationships among the variables. It was also hypothesized that the proposed theoretical model could explain a large proportion of the differences between suicide rates from state to state. The variables for the first model included the following: male, divorce, Federal Election Commission-Revised. PCS-R, Economic Climate Scale, Gun Access Scale-Revised, and Violence Index-R. Maximum likelihood (ML) estimation was conducted using *Analysis of Moment Structures* [AMOS] 5.0 statistical package (Arbuckle, 1997). AMOS allows the user to estimate the model using either a graphical interface or series of equations. Byrne (2001) provides a useful guide to SEM using the AMOS software. AMOS was particularly useful because it can estimate observed or latent variables, which were both employed in this analysis. The first

measurement model was tested based on theoretical considerations and the hypotheses outlined in Chapter III. Figure1 for the graphical representation of Model I as hypothesized.

In the measurement model, the latent variables were allowed to covary with each other. Factor analysis was used to estimate the measurement model and generate factor scores for the structural model. This method was chosen because of the small sample size and issues that were likely to arise using ML estimation with a small sample (N=50). It would have been optimal to use PLS estimation, but there were no commercially available software packages with this estimation method at the point of analysis.

Figure 1: Proposed Theoretical Model of Suicide (Model I)

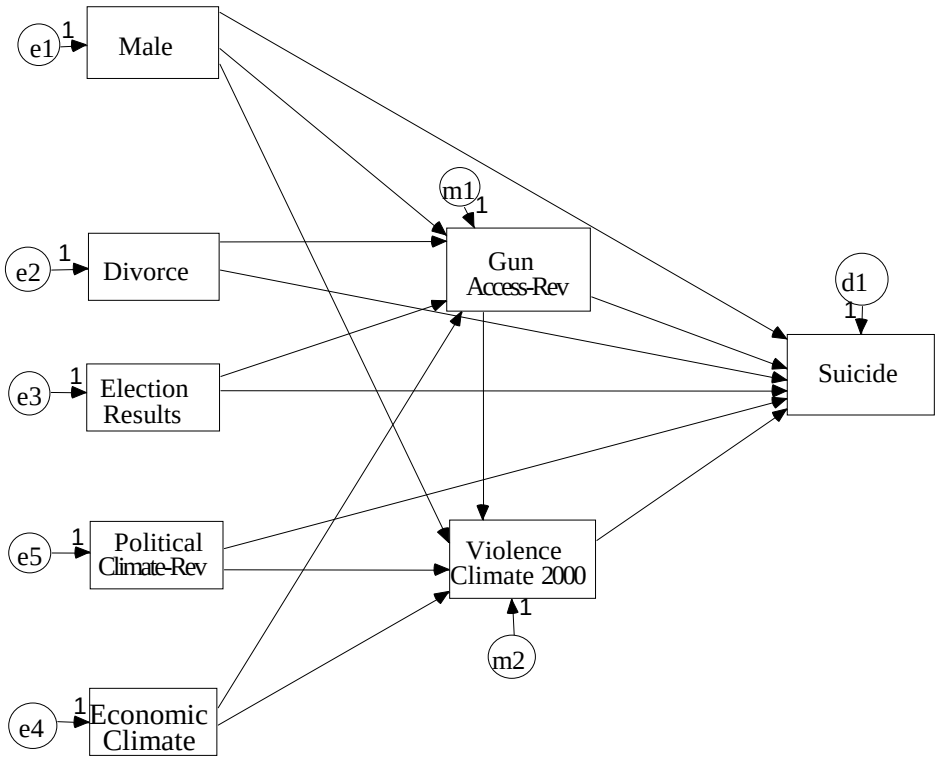

The rectangles are measured variables, the large small circles are residual variances.

An initial test of Model I revealed that the data were not a good fit for the model. There are many goodness of fit indices calculated by AMOS, but the following will be reported in this section: CMIN, GFI, AGFI, NFI, CFI, RMSEA, and AIC. *CMIN* (Bollen, 1989) is also called the minimum discrepancy or χ^2. The CMIN simultaneously tests the extent to which all the residuals in the equation $\Sigma - \Sigma(\theta)=0$. (Byrne, 2001). CMIN asks the question how similar are the sample data to the "ideal" population data? In other words, this is one case where accepting the null hypothesis is the desired outcome, because the null hypothesis makes the statement, "These data being tested are similar to the whole population and it can be said with 95% certainty that this result is not a fluke, but a highly likely result caused by the independent variable/s' effect/s on the dependent variable." Unfortunately, the initial Model I was less than ideal, χ^2 (14, N=50)=90.061 (CMIN) with an associated probability of < .001, indicating a poor fit of the data with the theoretical model. This result says that the structural model (see Figure 1) was significantly different than the "real" population model and that it is 99.99% sure that the results from the study were not true to the rest of the population, if measured.

The goodness-of-fit index (*GFI*) is a measure of the relative amount of variance and covariance in the sample matrix (*S*) that is jointly explained by the population matrix=Σ (Byrne, 2001). *AGFI* is the same as GFI except that it accounts for the degrees of freedom in the specified model (Byrne, 2001). Hu and Bentler (1995) characterize the GFI and AGFI as absolute indices of fit because they compare the hypothesized model with no model at all. The values for GFI and AGFI range from zero to 1.00, with values closer to 1.00 indicating a better fit. Fan, Thompson and Wang (1999) had some words of caution that were important for the present study. They stated

that the GFI and AGFI can be overly influenced by sample size, which is a problem for the present study's small sample of 50 cases. The GFI and AGFI values for the hypothesized model were .746 and .346 respectively, again indicating a poor fit for the data.

Byrne (2001) states that the *normed fit index* (*NFI*) has been the practical criterion of choice after it was developed by Bentler and Bonett in 1980. She also indicates that due to the NFI's tendency to underestimate fit for small samples (relevant here), reporting of the *comparative fit index* (*CFI*) is also helpful. Both of these indices range from zero to 1.00, with the values closer to 1.00 indicating a good fit. The NFI and CFI compare the hypothesized model with a purely independent model. In other words, the NFI and CFI calculate the statistic of how similar the hypothesized model is with a model in which none of the variables have any effect on each other (i.e., the correlations of variables with each other would be zero). The result of the NFI and CFI for the hypothesized Model I were .617 and .633 respectively, again indicating a poor fit.

Another commonly used fit index is the *root mean square error of approximation* (*RMSEA*). Steiger and Lind (cited in Byrne, 2001) proposed this fit index in 1980, but it has recently been recognized as one of the most informative criteria in covariance structure modeling (Byrne, 2001). In simplified terms, the RMSEA asks, "How well would the model, with unknown but optimally chosen parameter values, fit the population covariance matrix if it were available?" (Browne & Cudek, 1993, p. 137-138). The measure is a particularly good one for the present study, because it takes into account the number of estimated parameters in the model (i.e., the model's complexity). Values less than .05 indicate a good fit. AMOS also estimates

confidence intervals for RMSEA and the probability that RMSEA is accurately valuing the fit of the model in the population. The RMSEA value calculated for the hypothesized Model I was .333 (90 percent confidence interval ranging from .269 to .400, $p<.001$). This demonstrates that the hypothesized model was not a good fit for the data and that the probability of Model I actually being a good fit was less than 1 in 1000.

The next two fit indices are related to the model's simplicity or parsimony and are relevant to the results of the hypothesized Model I. *Akaike's* (1987) *information criterion* (*AIC*) and Bozdogan's (1987) *consistent Akaike's information criterion* (*CAIC*) are estimates of fit that take parsimony into account (i.e., the number of parameters estimated). The AIC and CAIC are different from each other only in that AIC takes the degrees of freedom into account, whereas CAIC takes the sample size into account instead. The values calculated by AIC and CAIC are generated for three models each: the independence model, the saturated model, and the hypothesized model. The hope for the AIC and CAIC is that the hypothesized model statistic fares better than either the independence model (where the variables are completely unrelated and not correlated with each other) or the saturated model (where the variables are perfectly correlated with each other and the correlations are 1.00). The results of the AIC were 72.00 for the saturated model and 251.028 for the independence model. The AIC value for the hypothesized Model I fared worse than the saturated model (AIC=134.061). Similarly, the saturated model taking sample size into account (CAIC) was calculated to be 176.833 and the independence model was 274.325. The hypothesized Model I was also worse than the saturated model (CAIC=198.126). These measures indicated a poor fit for the data again.

The AMOS program offered some suggestions to improve the hypothesized model to better reflect the data. The modification indices suggested by AMOS were considered in comparison with a priori theoretical considerations. The resulting model is presented as Figure 4. The residual term for male (e1) was allowed to covary with the error terms for divorce (e2), Federal Election Commission-Revised (e3), and Economic Climate Scale (e4). The variable PCS-R was strongly correlated with Economic Climate Scale (r=.743), indicating that there was either a latent construct between them or caused both to vary at the same level. The best model included Economic Climate Scale and not PCS-R, so PCS-R was dropped. The non-significant paths were also eliminated as they were determined to be spurious. Also, the measure that best fit the model for Violence Climate was VCR-2000, so it was retained. Violence Index-R and Violence Index 2000 were similar measures, because Violence Index-R was simply the factor score of the number of crimes committed in 2000 adjusted for the population with homicide, robbery, and battery each

Figure 4: Revised Theoretical Model of Suicide (Model I-R)

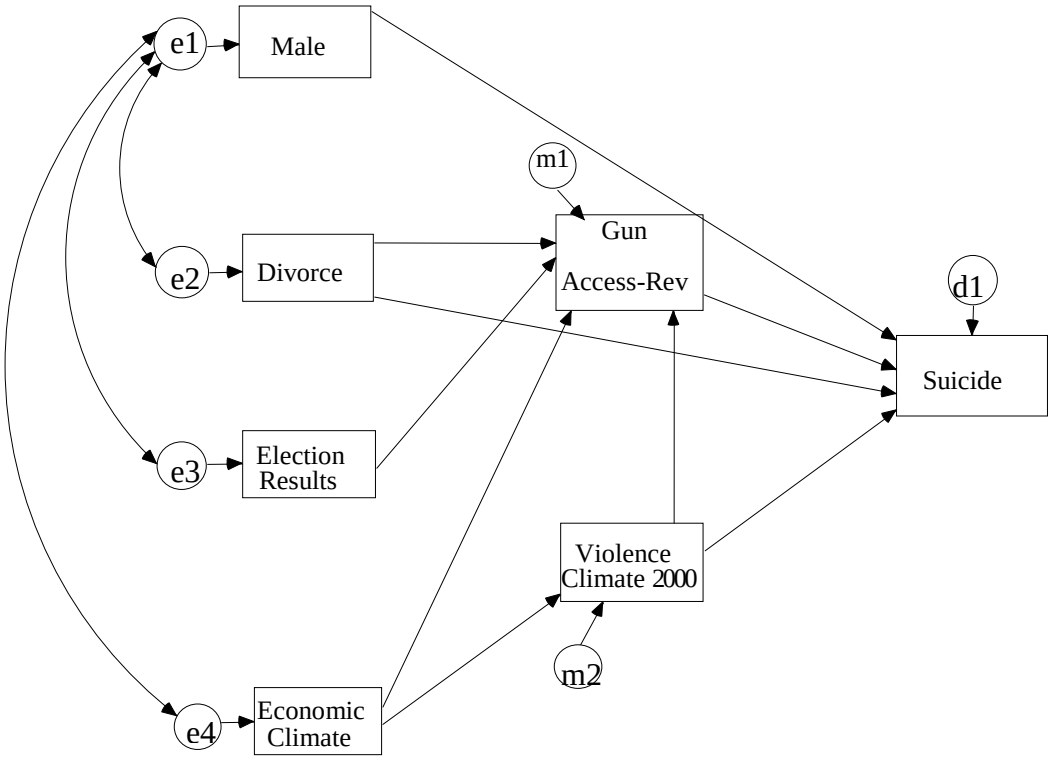

being an indicator in a factor analysis. Violence Index 2000 was the simply the total number of all the violent crimes committed in each state in 2000 adjusted for the population (including homicide, robbery, battery, and rape). Finally, the path from gun access to Violence Index was not significant and it was determined that for this model and data, Violence Index 2000 influenced gun access much more strongly than the other way around. Thus the path from gun access to Violence Index 2000 was dropped. The estimates were again calculated for the hypothesized Model I-R. See Figure 5 for the path coefficients for Model I-R.

The initial test of the measurement model yielded a very good fit for the Model I-R χ^2 (9, N=50)=4.751 (CMIN) with an associated probability of .855 indicating an excellent fit for the data and theoretical model. The calculated GFI and AGFI were

.973 and .915, well within the expected range of zero to 1.00 and indicating an excellent fit. The NFI and CFI values were also indicative of a good fit with .972 and 1.00, respectively. For the hypothesized Model I-R, the RMSEA value was also excellent (RMSEA=.000, 90 percent lower bound confidence interval=.000, 90 percent upper bound confidence interval=.088, p=.897) and indicative of a good fit for the root mean square error of the approximation. The AIC and CAIC also indicated a good fit for the data with the hypothesized model being significantly better than either the saturated or independence models: AIC=42.751 (saturated model=56.000, independence model=183.397) and CAIC=98.079 (saturated model=137.537, independence model=203.781).

In addition to the findings outlined by the fit statistics highlighted previously, the model explained 76.2 percent of the variance in suicide rates from state to state and was a statistically significant predictor of suicide rates F (6, 43)=22.889, p< .001). All of the path coefficients were statistically significant predictors with the exception of the path from Violence Index 2000 to suicide (β=.094, CR=1.190, p=.234). The path from Economic Climate Scale to Violence Index 2000 was significant (β=.402, CR=3.070, p=.002) and from Economic Climate Scale to Gun Access Scale-Revised was also significant (β=-.277, CR=- 2.856, p < .001). The other paths from the predictors to Gun Access Scale-Revised were significant: divorce (β=-.407, CR=- 4.493, p <.001), Violence Index 2000 (β=.418, CR=4.311, p < .001), and Federal Election Commission-Revised (β=-.547, CR=- 6.058, p < .001). Three other paths were also significant predictors of suicide overall: male (β=.487, CR=5.946, p < .001), divorce (β=.352, CR=3.926, p < .001), and Gun Access Scale-Revised (β=-.339, CR=- 4.216, p < .001).

Given the excellent fit statistics and the strength of the relationships, the hypothesized Model I-R was retained.

Figure 5: Revised Theoretical Model of Suicide with Coefficients (Model I-R)

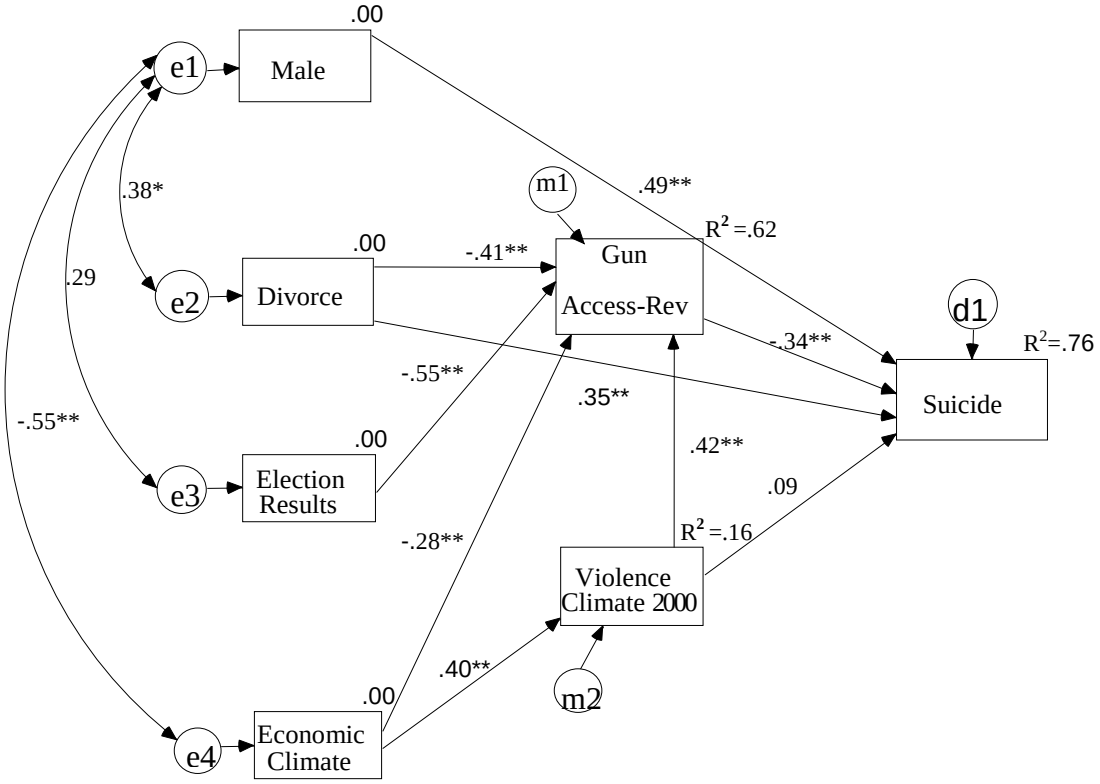

It was hypothesized that the structural model with the predictors—male, divorce, Federal Election Commission-Revised, PCS-R, and Elder Economic Climate Scale — and with the mediators—Gun Access Scale-Revised, and Violence Index-R—was a good fit for the data with the criterion suicide overall and this was strongly supported with these data. The variables had a strong linear effect on suicide rates in 2000 and when combined in a series of regression equations, these six variables were able to predict elder suicide rates better than the saturated or independent models. The Model I-R, fully mediated model, was also a better fit for these data than the partially mediated

model with paths from gun access and violence climate restricted to zero. This means that the model as represented in Figure 5 was the best fit for these data.

One significant point here is that gun access was found to be a mediator for violence climate and suicide and violence climate was not the mediator for gun access and suicide. This differs slightly from what was originally hypothesized, that the relationship between violence climate and gun access were relatively equal. It was suspected that violence led to the need for easier gun access and that easier gun access led to higher rates of violence. It was determined that with these data and this model, the directional relationship was with gun access as the mediator. It was also hypothesized that the proposed theoretical model could explain a large proportion of the differences between suicide rates from state to state and this was significantly true for these data. The Model I-R explained 76.2 percent of the differences in suicide rates from state to state. The next section discusses the hypothesized model of gun suicide.

Model II: Gun Suicide

It was hypothesized that the structural model with the predictors male, divorce, Federal Election Commission-Revised. PCS-R, and Elder Economic Climate Scale and with the mediators Gun Access Scale-Revised, and Violence Index-R was a good fit for the data with the criterion gun suicide. Another way of saying this is, that the hypothesized variables had a strong linear effect on observed rates of gun suicide and that, when combined in a series of regression equations, these seven variables would be able to predict gun suicide rates better than a model with perfect correlations among the variables and much better than a model with no relationships among the variables. It was also hypothesized that the proposed theoretical model could explain a large proportion of the differences between gun suicide rates from state to state. The variables for the second model included the following: male, divorce, FEC-R. PCS-R, Economic Climate Scale, Gun Access Scale-Revised, and Violence Index-R. Just as with the model for suicide overall, maximum likelihood (ML) estimation was conducted using AMOS 5.0 statistical package (Arbuckle, 1997). The first measurement model was tested based on theoretical considerations and the hypotheses outlined in Chapter III. Figure 6 for the graphical representation of Model II as hypothesized.

In the measurement model, the latent variables were allowed to covary with each other. Factor analysis was used to estimate the measurement model and generate factor scores for the structural model. This method was chosen because of the small sample size and issues that were likely to arise using ML estimation with a small sample (N=50). An initial test of Model II revealed that the data were not a good fit for the model. The following fit statistics will be reported in this section: CMIN, GFI, AGFI, NFI, CFI, RMSEA, and AIC. Unfortunately, the initial Model II was less than

ideal, χ^2 (13, N=50)=86.627 (CMIN) with an associated probability of $p < .001$, indicating a poor fit of the data with the theoretical model. The goodness-of-fit index (*GFI*) is a measure of the relative amount of variance and covariance in the

Figure 6: Theoretical Model of Gun Suicide (Model II)

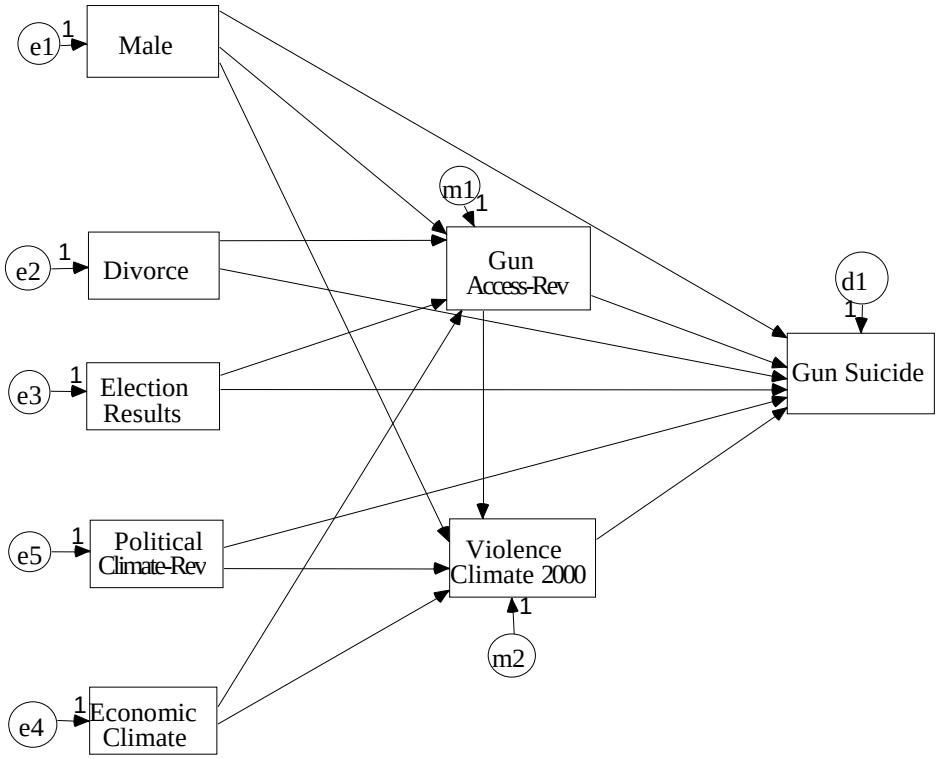

sample matrix (*S*) that is jointly explained by Σ (Byrne, 2001). The values calculated by AMOS for the hypothesized Model II were GFI=.751 and AGFI=.311, which is well outside the recommended values for good fitting data, near 1.00. The result of the NFI and CFI for the hypothesized Model II were .638 and .651, respectively, again indicating a poor fit. Although the independence model for each was much worse (.000), the saturated model (one with perfect correlations among the variables) was much better (1.000).

The RMSEA value calculated for the hypothesized Model II was .340 (90 percent confidence interval =.274 to .410, $p<.001$). This demonstrates that the hypothesized model was not a good fit for the data and that the probability of Model II actually being a good fit was less than 1 in 1000. The AIC and CAIC statistics were generated for three models each: the independence model, the saturated model, and the hypothesized model. The hope for the AIC and CAIC statistic is that the hypothesized model statistic fares better than either the independence model (where the variables are completely unrelated and not correlated with each other) or the saturated model (where the variables are perfectly correlated with each other and the correlations are 1.00). The results of the AIC were 72.00 for the saturated model and 255.159 for the independence model. The AIC value for the hypothesized Model II fared worse than the saturated model (AIC=132.627), which was not the desired result. This means that the model where all of the variables have perfect correlations was much better fitting than the hypothesized model. Similarly, the saturated model, taking sample size into account (CAIC) was calculated to be 176.833 and the independence model was 278.455. The hypothesized Model II was also worse than the saturated model (CAIC=199.604). These measures indicated a poor fit for the data again.

The AMOS program offered some suggestions to improve the hypothesized model to better reflect the data. The modification indices suggested by AMOS were considered in comparison with a priori theoretical considerations. The resulting model is presented as Figure 7.

Figure 7: Revised Theoretical Model of Gun Suicide (Model II-R)

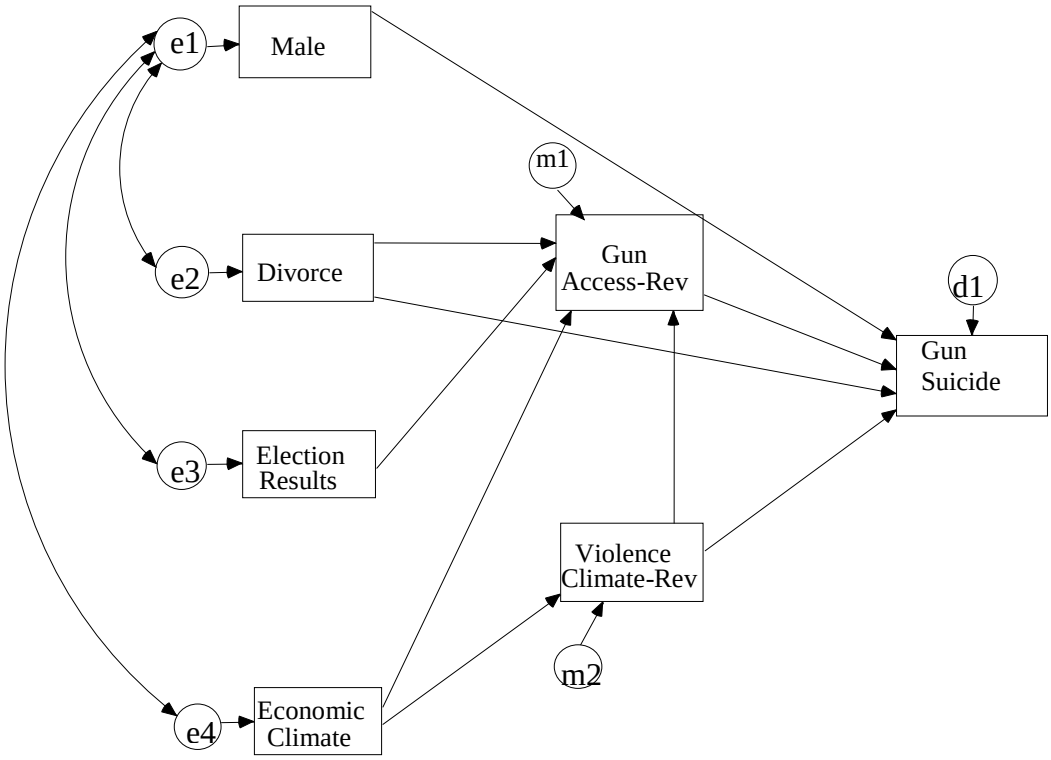

The residual term for male (e1) was allowed to covary with the error terms for divorce (e2), Federal Election Commission-Revised (e3), and Economic Climate Scale (e4). The variable PCS-R was strongly correlated with Economic Climate Scale (r=.743), indicating that there was a latent construct between them or a systematic error that caused both Economic Climate Scale and PCS-R to vary at the same level. The best model included Economic Climate Scale and not PCS-R, so PCS-R was dropped. The non-significant paths were also eliminated as they were determined to be spurious. Also, the measure that best fit the model for Violence Climate was VCR-R, so it was retained. Finally, the path from Gun Access Scale-Revised to Violence Index was not significant and it was determined that for this model and data, Violence Index-R influenced Gun Access Scale-Revised much more strongly than the other way around.

The path from Gun Access Scale-Revised to Violence Index 2000 was dropped. The estimates were again calculated for the hypothesized Model II-R. See Figure 8 for the path coefficients for Model II-R.

Figure 8: Revised Theoretical Model of Gun Suicide with Coefficients (Model II-R)

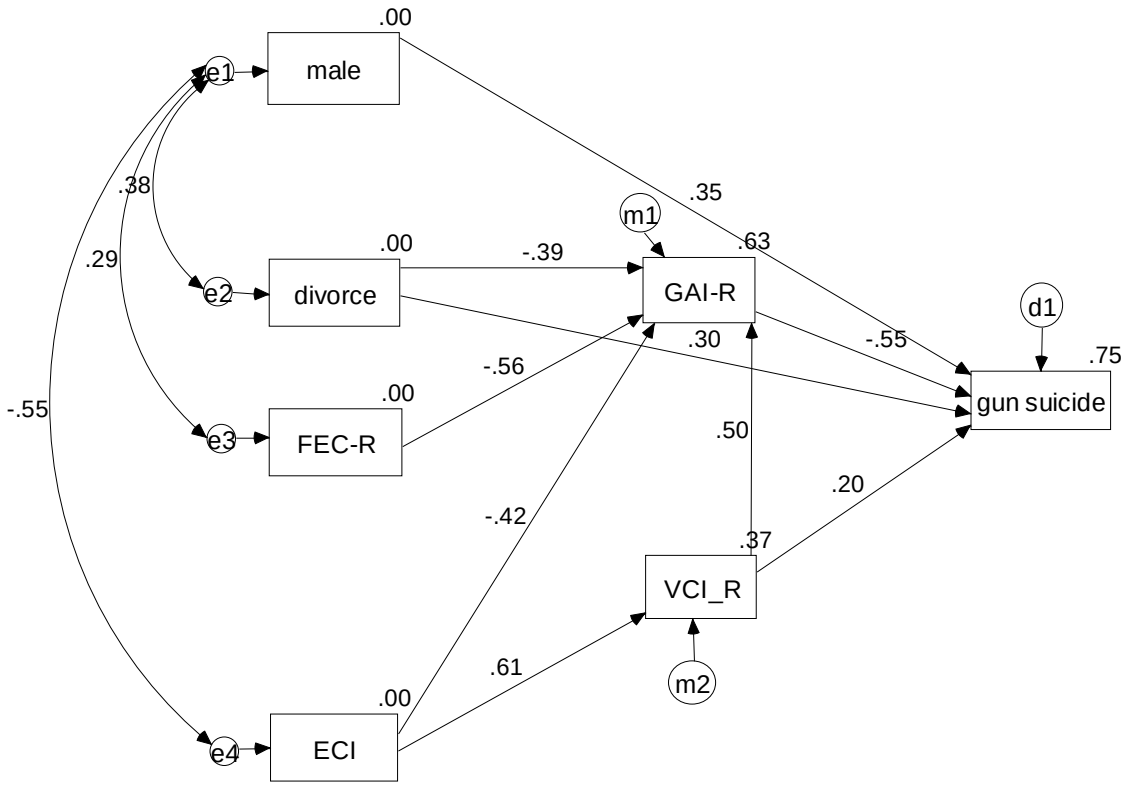

The initial test of the measurement model yielded a very good fit for the Model II-R χ^2 (9, N=50)=5.279 (CMIN) with an associated probability of .809 indicating an excellent fit for the data and theoretical model. The calculated GFI and AGFI were .970 and .906, well within the expected range of zero to 1.00 and indicating an excellent fit. The NFI and CFI values were also indicative of a good fit with .972 and 1.00 respectively. For the hypothesized Model II-R, the RMSEA value was also excellent (RMSEA=.000, 90 percent confidence interval=.000 to .102, *p*=.897) and indicative of a good fit for the root mean square error of the approximation. Interpretation of this

indicates that one can be 90 percent certain that the true value of RMSEA (.000) falls between .000 and .102, a more precise range than the first model. The AIC and CAIC also indicated a good fit for the data with the hypothesized model being significantly better than either the saturated or independence models: AIC=43.279 (saturated model=56.000, independence model=201.727) and CAIC=98.607 (saturated model=137.537, independence model=222.111).

In addition to the findings outlined by the fit statistics highlighted previously, the model explained 76.8 percent of the variance in gun suicide rates from state to state and was a statistically significant predictor of gun suicide rates F (6, 43)=23.78, $p<$ .001). All of the path coefficients were statistically significant predictors of gun suicide rates. The path from Economic Climate Scale to Violence Index-R was significant (β=.612, *CR*=5.414, $p < .001$) and from Economic Climate Scale to Gun Access Scale-Revised was a good predictor as well (β=-.418, *CR*=- 3.760, $p < .001$). The other paths from the predictors to Gun Access Scale-Revised were significant: divorce (β=-.386, *CR*=- 4.331, $p <.001$), Violence Index-R (β=.501, *CR*=4.536, $p < .001$), and Federal Election Commission-Revised (β=-.557, *CR*=- 6.225, $p < .001$). Four other paths were also significant predictors of gun suicide: male (β=.354, *CR*=4.141, $p < .001$), Violence Index-R (β=.195, *CR*=2.466, p=.014), divorce (β=.296, *CR*=3.320, $p < .001$), and Gun Access Scale-Revised (β=-.547, *CR*=- 6.987, $p < .001$). Given the excellent fit statistics and the strength of the relationships, the hypothesized Model II-R was retained.

This fits with the original hypothesis that the structural model (Model II-R) with the predictors male, divorce, Federal Election Commission-Revised. PCS-R, and Elder Economic Climate Scale and with the mediators Gun Access Scale-Revised, and Violence Index-R was a good fit for the data with the criterion gun suicide. This model

was a better fit than the other three models (Model I-R, Model III-R, and Model IV-R), given the fit statistics and the overall percentage of variance explained (76.8). One particularly surprising finding for the full models was the relationship of gun access with violence climate, as highlighted in the previous section. The partially mediated models were not nearly as well-fitting as the full model (Model II-R), so this demonstrated that the fully mediated model was the best given the present data. It was also hypothesized that the proposed theoretical model could explain a large proportion of the differences between gun suicide rates from state to state and this hypothesis was supported clearly by the high percentage of explained variance (76.8 percent). The next section discusses the hypothesized model of elder suicide.

Model III: Elder Suicide

It was hypothesized that the structural model with the predictors male, divorce, Federal Election Commission-Revised. PCS-R, and Elder Economic Climate Scale and with the mediators Gun Access Scale-Revised, and Violence Index-R was a good fit for the data with the criterion elder suicide. In other words, that the hypothesized variables had a strong linear effect on elder suicide and that, when combined in a series of regression equations, these seven variables would be able to predict elder suicide rates better than a model with perfect correlations among the variables and much better than a model with no relationships among the variables. It was also hypothesized that the proposed theoretical model could explain a large proportion of the differences between elder suicide rates from state to state. Maximum likelihood (ML) estimation was conducted using AMOS 5.0 statistical package (Arbuckle, 1997). The first measurement model was tested based on theoretical considerations and the hypotheses outlined in Chapter III. Figure 9 for the graphical representation of Model III as hypothesized.

In the measurement model, the latent variables were allowed to covary with each other. Factor analysis was used to estimate the measurement model and generate factor scores for the structural model. Not surprisingly, the initial test of Model III revealed that the Model III was less than ideal, χ^2 (13, N=50)=90.560 (CMIN) with an associated probability of < .001, indicating a poor fit of the data with the theoretical model. The statistics generated by AMOS for GFI and AGFI were .748 and .302, which was much less than the recommended value of .95 or higher. The result of the NFI and CFI for the hypothesized Model III were .556 and .559 respectively, again indicating a poor fit. Although the independence model is much worse, the saturated

Figure 9: Theoretical Model of Elder Suicide (Model III)

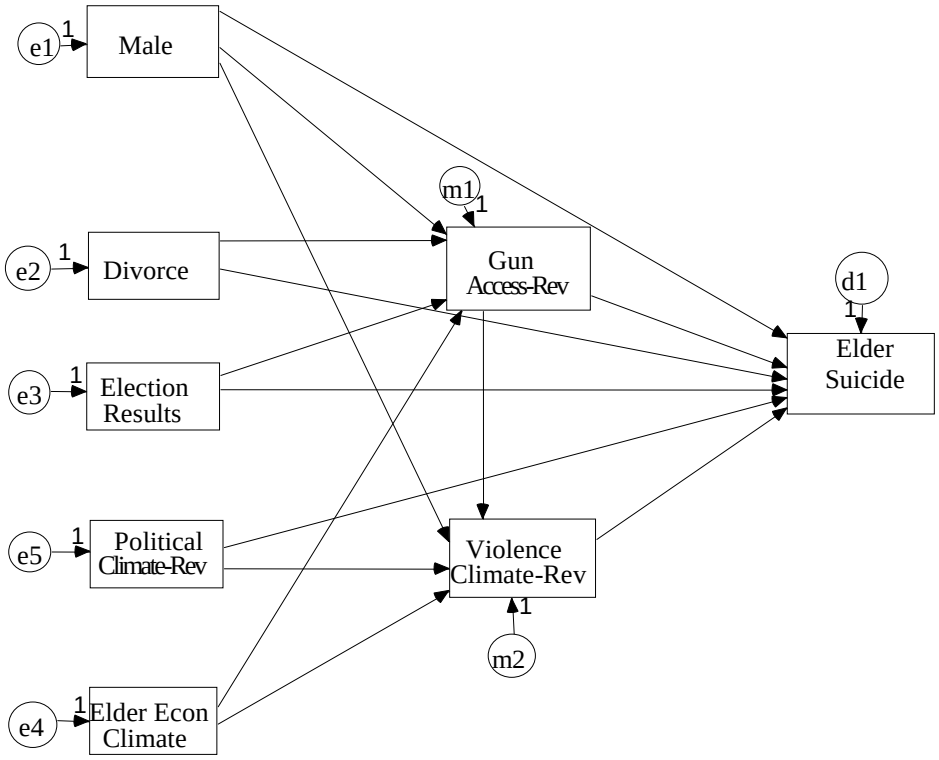

model (one with perfect correlations among the variables) was much better. The RMSEA value calculated for the hypothesized Model III was .349 (90 percent confidence interval =.283 to .418, p<.001). This demonstrates that the hypothesized model was not a good fit for the data and that the probability of Model III actually being a good fit was less than 1 in 1000. The results of the AIC were 72.00 for the saturated model and 219.975 for the independence model. The AIC value for the hypothesized Model III fared worse than the saturated model (AIC=136.560). Similarly, the saturated model taking sample size into account (CAIC) was calculated to be 176.833 and the independence model was 243.272. The hypothesized Model III was also worse than the saturated model (CAIC=176.833). These measures indicated a poor fit for the data again. Given the predominance of evidence that the hypothesized model did not

adequately fit the data, several changes were made to the hypothesized model. Those results with the goodness of fit statistics, are outlined next.

The AMOS program offered some suggestions to improve the hypothesized model to better reflect the data. The modification indices suggested by AMOS were considered in comparison with a priori theoretical considerations. The resulting model is presented as Figure 10.

Figure 10: Revised Theoretical Model of Elder Suicide (Model III-R)

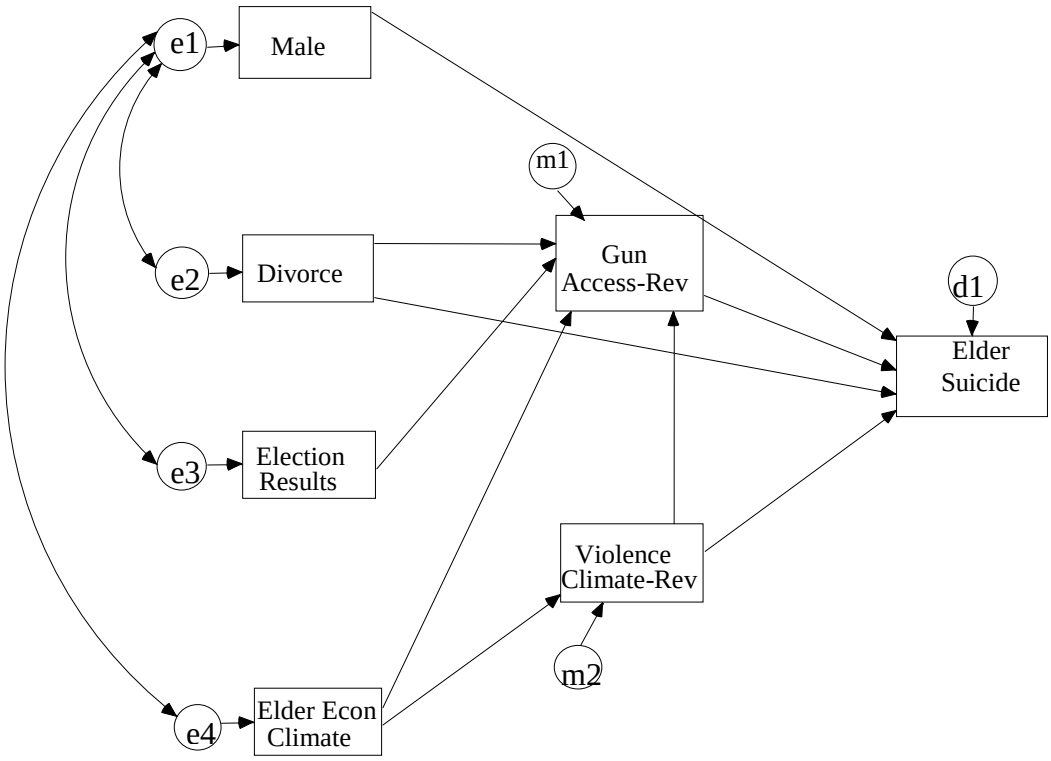

The residual term for male (e1) was allowed to covary with the error terms for divorce (e2), Federal Election Commission-Revised (e3), and Elder Economic Climate Scale (e4). The variable PCS-R was strongly correlated with Elder Economic Climate Scale (r=.769), indicating that there was either a latent construct between them or causing both to vary at the same level. The best model included Elder Economic

Climate Scale and not PCS-R, so PCS-R was dropped. The non-significant paths were also eliminated as they were determined to be spurious. Also, the measure that best fit the model for Violence Climate was VCR-R, so it was retained. Finally, the path from Gun Access Scale-Revised to Violence Index was not significant and it was determined that for this model and data, Violence Index-R influenced Gun Access Scale-Revised much more strongly than the other way around. The path from Gun Access Scale-Revised to Violence Index-R was dropped.

The estimates were again calculated for the hypothesized Model III-R. See Figure 11 for the path coefficients for Model III-R. The initial test of the measurement model yielded a very good fit for the Model III-R χ^2 (9, N=50)=5.049 (CMIN) with an associated probability of .830 indicating an excellent fit for the data and theoretical model. The calculated GFI and AGFI were .971 and .910, well within the expected range of zero to 1.00 and indicative an excellent fit. The NFI and CFI values were also indicative of a good fit with .967 and 1.000, respectively. For the hypothesized Model III-R, the RMSEA value was also excellent (RMSEA=.000, 90 percent confidence interval=.000 to .096, *p*=.877) and indicative of a good fit for the root mean square error of the approximation. The AIC and CAIC also indicated a good fit for the data with the hypothesized model being significantly better than either the saturated or independence models: AIC=43.049 (saturated model=56.000, independence model=165.212) and CAIC=98.378 (saturated model=137.537, independence model=185.596).

Figure 11: Revised Theoretical Model of Elder Suicide with Coefficients (Model III-R)

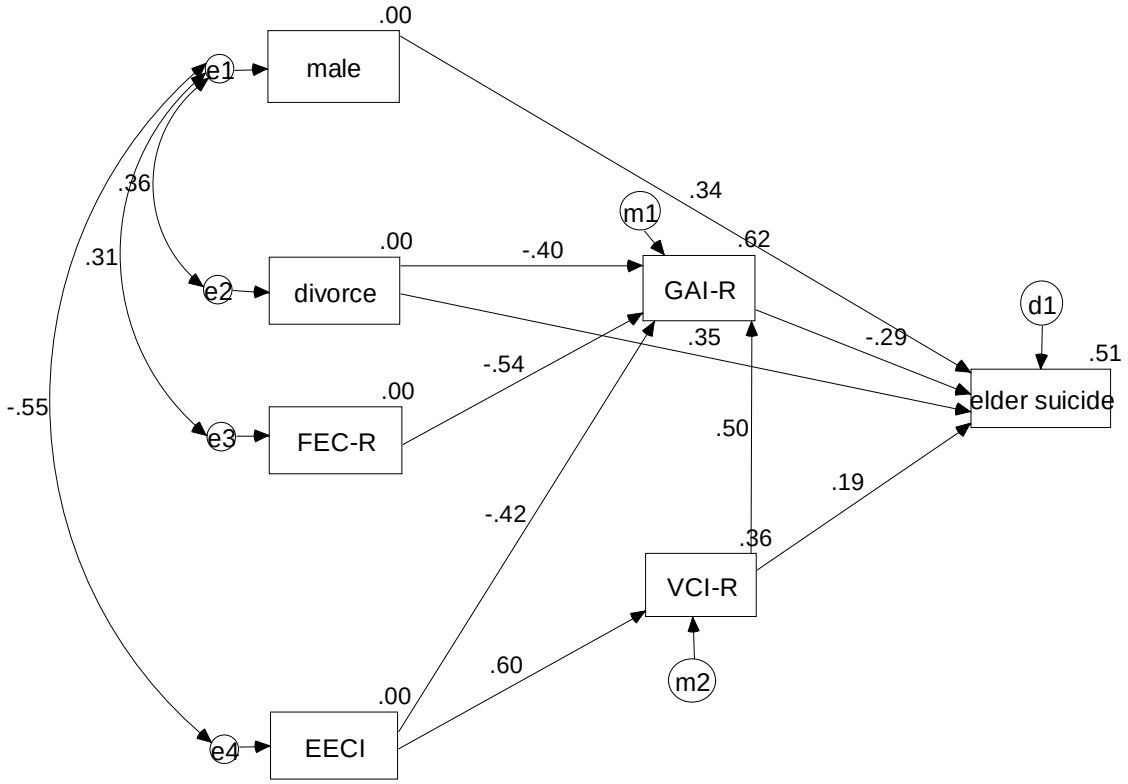

In addition to the findings outlined by the fit statistics highlighted previously, the model explained 53.4 percent of the variance in suicide rates from state to state and was statistically significant predictor of elder suicide rates F (6, 43)=8.225, p< .001). All of the path coefficients were statistically significant predictors with the exception of the path from Violence Index-R to elder suicide (β=.188, CR=1.704, p=.088). The paths from Elder Economic Climate Scale to Violence Index-R and Gun Access Scale-Revised were significant (β=.601, CR=5.262, p < .001) and (β=-.418, CR=- 3.740, p < .001) respectively. The other paths from the predictors to Gun Access Scale-Revised were significant: divorce (β=-.400, CR=- 4.466, p <.001), Violence Index-R (β=.498, CR=4.510, p < .001), and Federal Election Commission-Revised (β=- .514, CR=-

5.945, $p < .001$). Three other paths were also significant predictors of elder suicide: male (β=.345, *CR*=2.887, *p*=.004), divorce (β=.352, *CR*=2.831, *p*=.005), and Gun Access Scale-Revised (β=-.292, *CR*=- 2.684, *p*=.007). Given the excellent fit statistics and the strength of the relationships, the hypothesized Model III-R was retained.

It was somewhat disappointing to find that the proposed model was not as helpful in predicting elder suicide as suicide overall or gun suicide. It was hypothesized that the structural model with the predictors male, divorce, Federal Election Commission-Revised. PCS-R, and Elder Economic Climate Scale and with the mediators Gun Access Scale-Revised, and Violence Index-R was a good fit for the data with the criterion elder suicide and this was supported and evidenced by the excellent fit statistics outlined earlier. While the hypothesized variables had a strong linear effect on elder suicide and performed much better than either the saturated or independent models, Model III-R explained significantly less of the differences between state elder suicide rates (53.4 percent as opposed to76.2 and 76.8 percent). The next section discusses the hypothesized model of elder gun suicide.

Model IV: Elder Gun Suicide

It was similarly hypothesized that the structural model with the predictors male, divorce, Federal Election Commission-Revised. PCS-R, and Elder Economic Climate Scale and with the mediators Gun Access Scale-Revised, and Violence Index-R was a good fit for the data with the criterion elder gun suicide. Put another way, the hypothesized variables would be able to predict elder gun suicide rates better than a model with perfect correlations among the variables and much better than a model with no relationships among the variables. It was also hypothesized that the proposed theoretical model could explain a large proportion of the differences between elder gun suicide rates from state to state. The variables for the last model included the following: male, divorce, Federal Election Commission-Revised, PCS-R, Economic Climate Scale, Gun Access Scale-Revised, and Violence Index-R. Maximum likelihood (ML) estimation was conducted using AMOS 5.0 statistical package (Arbuckle, 1997). The first measurement model was tested based on theoretical considerations and the hypotheses outlined in Chapter III. Figure 12 for the graphical representation of Model IV as hypothesized.

In the measurement model, the latent variables were allowed to covary with each other. Factor analysis was used to estimate the measurement model and generate factor scores for the structural model. This method was chosen because of the small sample size and issues that were likely to arise using ML estimation with a small sample (N=50). It would have been optimal to use PLS estimation, but there were no commercially available software packages with this estimation method at the point of analysis.

Figure 12: Theoretical Model of Elder Gun Suicide (Model IV)

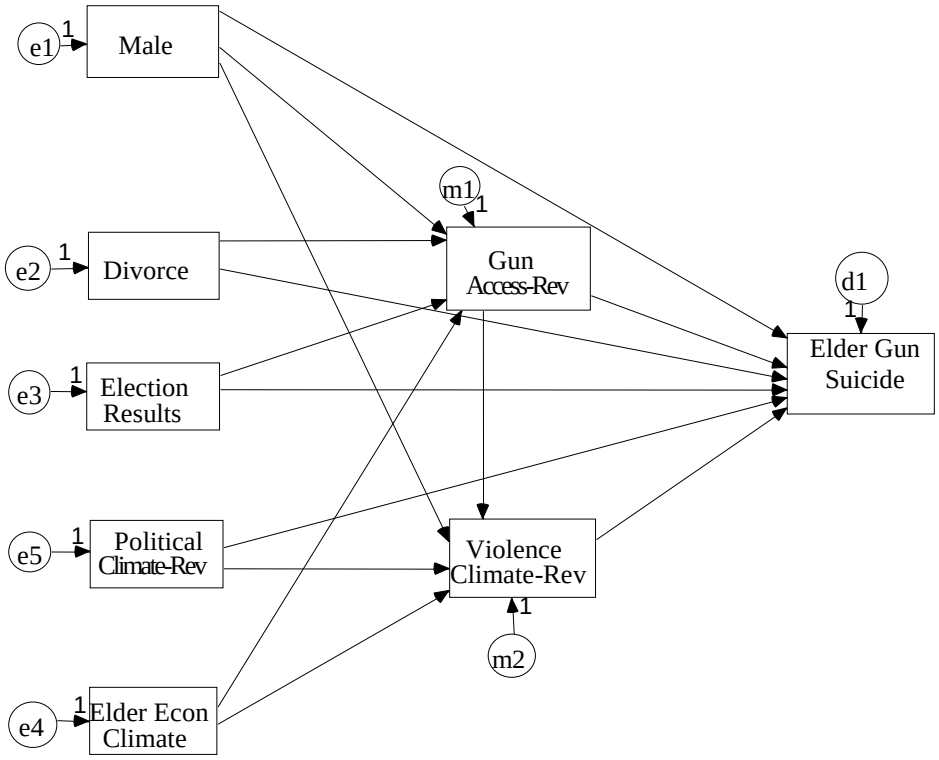

Unfortunately, an initial test of Model IV revealed that the model was less than ideal, χ^2 (14, N=50)=90.471 (CMIN) with an associated probability of < .001, indicating a poor fit. The GFI and AGFI for Model IV were calculated as being .748 and .302 respectively, which indicated that the hypothesized model was only slightly better than no model at all. The result of the NFI and CFI for the hypothesized Model IV were .567 and .572 respectively, again indicating a poor fit. Although the independence model is much worse, the saturated model (one with perfect correlations among the variables) was much better. The RMSEA value calculated for the hypothesized Model IV was .349 (90 percent confidence interval=.283 to .418, p<.001). The results of the AIC were 72.00 for the saturated model and 2224.816 for the independence model. The AIC value for the hypothesized Model IV fared worse than the saturated model

(AIC=136.471). Similarly, the saturated model taking sample size into account (CAIC) was calculated to be 176.833 and the independence model was 248.112. The hypothesized Model IV was also worse than the saturated model (CAIC=203.448). These measures indicated a poor fit for the data again. The AMOS program offered some suggestions to improve the hypothesized model to better reflect the data. The modification indices suggested by AMOS were considered in comparison with a priori theoretical considerations. The resulting model is presented as Figure 13.

Figure 13: Revised Theoretical Model of Elder Gun Suicide (Model IV-R)

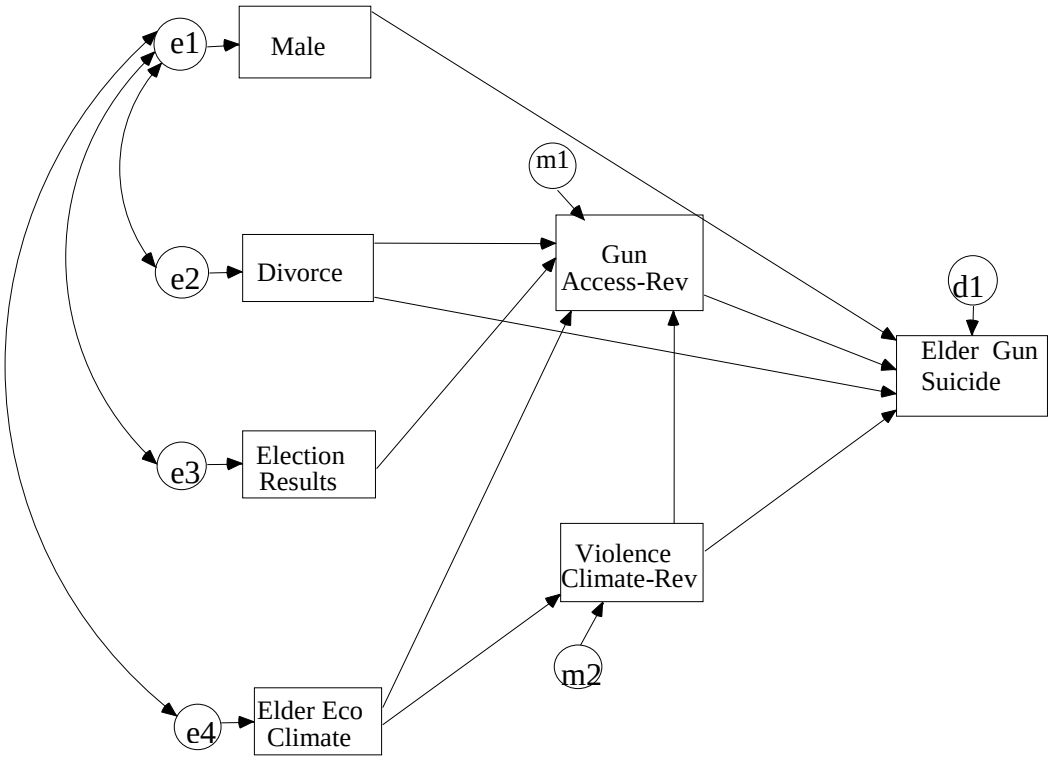

The residual term for male (e1) was allowed to covary with the error terms for divorce (e2), Federal Election Commission-Revised (e3), and Elder Economic Climate Scale (e4). The variable PCS-R was strongly correlated with Elder Economic Climate Scale (r=.743), indicating that there was either a latent construct between them or something

that caused both to vary at the same level. The best model included Economic Climate Scale and not PCS-R, so PCS-R was dropped. As with the previous models, the non-significant paths were eliminated as they were determined to be spurious. Also, the measure that best fit the model for Violence Climate was VCR-R, so it was retained. Finally, the path from Gun Access Scale-Revised to Violence Index was not significant and it was determined that for this model and data, Violence Index-R influenced Gun Access Scale-Revised much more strongly than the other way around. The path from Gun Access Scale-Revised to Violence Index 2000 was dropped. The estimates were again calculated for the hypothesized Model IV-R. See Figure14 for the path coefficients for Model IV-R.

The initial test of the measurement model yielded a very good fit for the Model IV-R χ^2 (9, N=50)=5.419 (CMIN) with an associated probability of .796 indicating an excellent fit for the data and theoretical model. The calculated GFI and AGFI were.969 and .904, well within the expected range of zero to 1.00. The NFI and CFI values were also indicative of a good fit with .965 and 1.000, respectively. For the hypothesized Model IV-R, the RMSEA value was also excellent (RMSEA=.000, 90 percent confidence interval=.000 to .105, *p*=.851). The AIC and CAIC also indicated an excellent fit for the data with the hypothesized model being significantly better than either the saturated or independence models: AIC=43.419 (saturated model=56.000, independence model=168.891) and CAIC=98.747 (saturated model=137.537, independence model=189.276).

In addition to the findings outlined by the fit statistics highlighted previously, the model explained 76.2 percent of the variance in suicide rates from state to state and

Figure 14: Revised Theoretical Model of Elder Gun Suicide with Coefficients (Model IV-R)

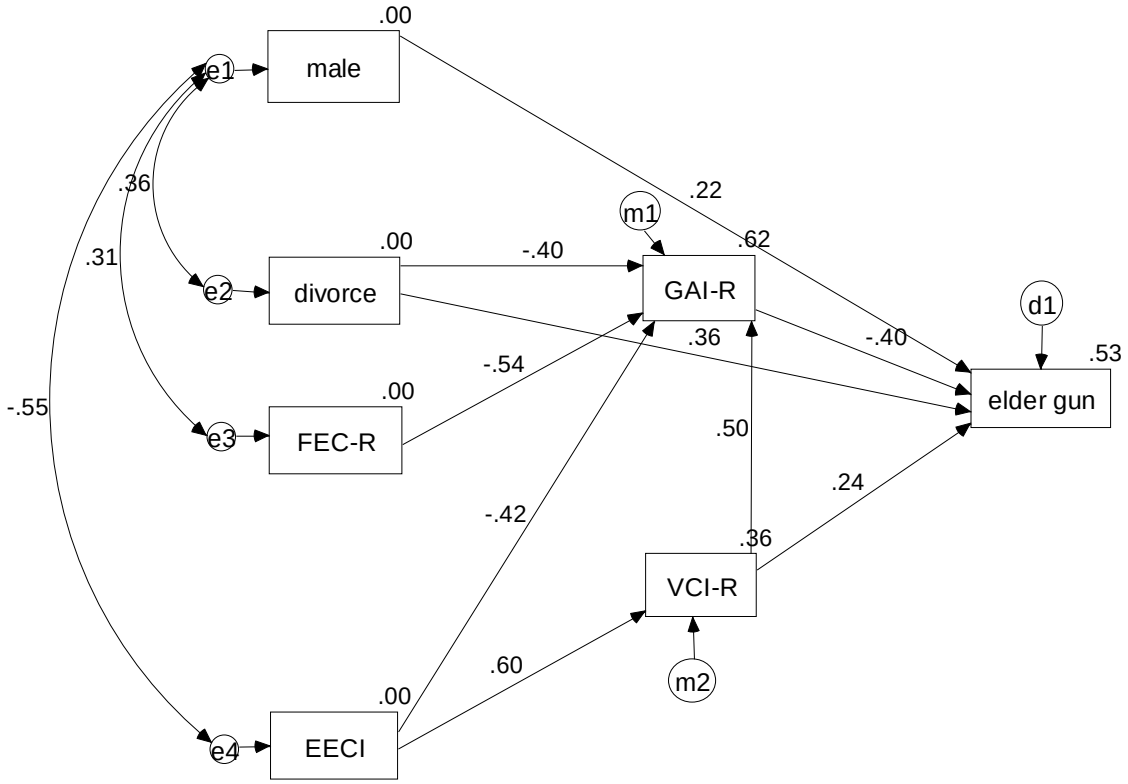

the model was statistically significant predictor of suicide rates F (6, 43)=9.168, p< .001). All of the path coefficients were statistically significant predictors with the exception of the path from male to elder gun suicide (β=.218, CR=1.858, p=.063). The paths from Elder Economic Climate Scale to Violence Index-R was significant (β=.601, CR=5.262, p < .001) and the path from Elder Economic Climate Scale to Gun Access Scale-Revised was also a significant one (β=-.418, CR=- 3.740, p < .001). The other paths from the predictors to Gun Access Scale-Revised were significant: divorce (β=-.400, CR=- 4.466, p <.001), Violence Index-R (β=.498, CR=4.510, p < .001), and Federal Election Commission-Revised (β=-.541, CR=- 5.945, p < .001). Three other paths were also significant predictors of elder gun suicide overall: Violence Index-R

(β=.239, *CR*=2.206, *p*=.027), divorce (β=.360, *CR*=2.950, *p*=.003), and Gun Access Scale-Revised (β=-.405, *CR*=- 3.798, $p < .001$). Given the excellent fit statistics and the strength of the relationships, the hypothesized Model IV-R was retained. The hypothesis was made that the structural model with the predictors—male, divorce, Federal Election Commission-Revised, PCS-R, and Elder Economic Climate Scale—and with the mediators—Gun Access Scale-Revised and Violence Index-R—was a good fit for the data with the criterion, elder gun suicide. The hypothesized variables were be able to predict elder gun suicide rates better than a model with perfect correlations among the variables (saturated model) and much better than a model with no relationships among the variables (independence model). It was also hypothesized that the proposed theoretical model could explain a large proportion of the differences between elder gun suicide rates from state to state. Unfortunately, this model was not as helpful in explaining the differences in elder gun suicide from state to state, despite the excellent fit of the data to the model. The variance explained was still high (53.4 percent), although it was not as high as the other models (76.2, 76.8, and 56.1 percent, respectively). The next section discusses the results of all the models, outlines the limitations of the present study, and offers suggestions for future research.

CHAPTER IX: DISCUSSION

Hypotheses and Findings

The purpose of the following chapter is to discuss and summarize key findings outlined in Chapters IV, V, VI, VII, and VIII and compare the present study in the context of the wider research and theoretical developments in suicidology. First, each of the hypotheses is presented individually with discussion and possible explanations from the data, given the context of previous research and theory about each item. This is followed by a discussion of the limits of the present study. Finally, the theoretical and research implications are discussed with an emphasis on directions for future work in suicidology. In review, the hypotheses for the present study were:

H_1: Political climate has a direct (+) effect on gun access

H_2: Political climate has a direct (+) effect on violence climate

H_3: Political climate has an indirect effect on suicide rates by influencing gun access and violence climate

H_4: Economic climate has a direct (+) effect on violence climate

H_5: Economic climate has an indirect effect on suicide rates by influencing gun access and violence climate

H_6: Status integration has a direct (-) effect on violence climate

H_7: Status integration has a direct (-) effect on suicide rates

H_8: Status integration has an indirect effect on suicide rates by influencing gun access and violence climate

H_9: Gun access and violence are directly related to each other

H_{10}: Gun access has a direct (+) effect on suicide

H_{11}: Violence climate has a direct (+) effect on suicide

H_{12}: The proposed theoretical model is a good fit for the data (Figure 4)

Figure 4: Revised Theoretical Model of Suicide (Model I-R)

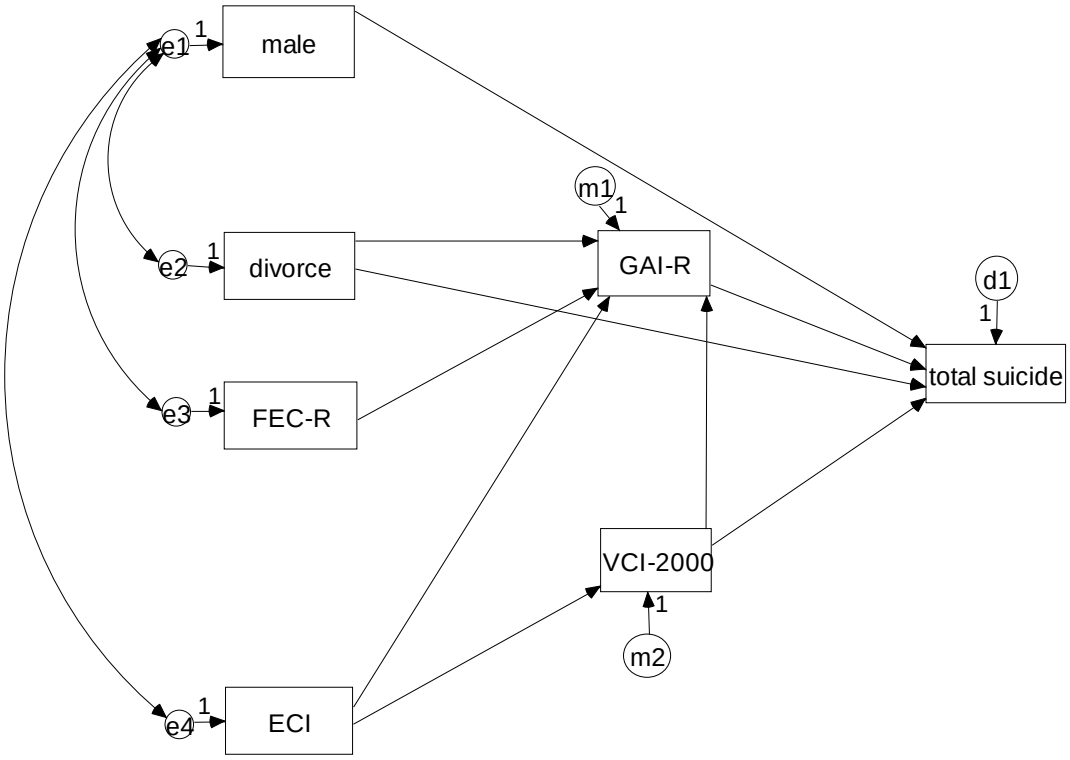

H_1: Political Climate and Gun Access

Political Climate (Federal Election Commission-Revised and PCS-R) was hypothesized to have a direct (+) effect on gun access and this hypothesis was supported by one measure (Federal Election Commission-Revised) and not supported by the other (PCS-R). As the percent of people who voted Republican in the last four Presidential elections (Federal Election Commission-Revised) increased, access to guns increased (β=- .547, C.R.=- 6.058, $p < .001$). The negative value for this finding is due to the way Gun Access Scale was coded. It is important to remember that (Gun Access Scale-Revised) was coded so that *higher scores* on the Gun Access Scale-Revised were indicative of *higher regulations* and *more gun control*. An inverse relationship is counter-intuitive, but indicative of easier access. Lower scores are indicative of less

regulation and easier access. In retrospect, it might have made more sense to code the scale the opposite way, so that higher scores mean easier access and the path diagram would be a bit more intuitive, with a positive, direct relationship instead of an inverse relationship.

This finding makes sense for several reasons. First, Republican candidates tend to favor gun rights and more lenient gun laws (easier access). Belief in less government intervention in private lives and liberty is a core value for members of the Republican party in the United States (Jansson, 2003, p. 16). This could be extended to mean that the government should not infringe on an individual's right to have a gun. As highlighted earlier, Governor Jeb Bush credited the National Rifle Association with helping his brother George W. Bush become elected President in 2000 (Join Together Online, 2003). Similarly, the hypothesis was made that as inter-party competition (partisanship) increased, gun access would increase. The political system in the United States is based on democratic values and an increase in competition would mean an increase in the *debate* about the access to guns. Hayes and Glick (1993) found that as the debate over living will legislation was raised (in the media and among policy-makers), innovation (and change) increased. They found both partisanship and inter-party competition to be significant predictors of living will legislation passage (Hays & Glick, 1993).

Hays and Glick's finding was contradicted with the second part of the political climate in the present study. The data revealed that inter-party competition was not significantly related to gun access. One potential explanation for this is likely due to the way inter-party competition was measured. The higher scores were indicative of more competition or conflict between Democrats and Republicans in state government.

When taken in the context of gun access, increased conflict does not equal passage of new legislation. It might be indicative of impasse, rather than decisions. States with little competition (either Republican or Democrat) might be clearer about the kinds of laws they want passed. For example, Massachusetts and Nevada scored similarly on the PCS-R for inter-party competition. Massachusetts is a strongly Democratic state and Nevada is a Republican stronghold. Massachusetts has some of the most restrictive gun laws in the country with a mean score of 3.84 on the Gun Access Scale, whereas Nevada errs much more on the side of gun rights, with an average score of 1.43 for the Gun Access Scale. This seems to help explain the seemingly contradictory finding that one of the political climate measures is predictive of gun access and the other was not a useful part of the gun access model at all.

H_2: Political Climate and Violence

Political Climate (Federal Election Commission-Revised and PCS-R) was hypothesized to have a direct (+) effect on violence climate and this hypothesis was supported by one measure (Federal Election Commission-Revised) and not supported by the other (PCS-R). PCS-R was a significant predictor of Violence Index-R, but Federal Election Commission-Revised was not. One explanation for this could be that PCS-R was essentially a measure of conflict between the Democratic and Republican parties and it is possible for this conflict to be present at multiple levels in the sociological structure. Several authors have linked political competition and violence (Clarke, 1998; Eitle, D., D'Alessio, & Stolzenburg, 2002; Luders, 2005; Olzak, 1990). One explanation frequently made with the discussion about politics and violence, the frustration-aggression hypothesis, began with research about lynching of African Americans in the 1930s (Raper, 1933) and included economic variables as

"explanation" for the frustration and violence at the early part of the century. There have also been Durkheimian explanations linking violence, politics, and social control (Lukes & Scull, 1983). It is dangerous to speculate too much about the finding in the present study, given that many of the studies examined racial climate as well. It is certainly possible that the frustration-aggression hypothesis could shed some light on the strong relationship found in the data of political climate and overall levels of violence. Because the discussions of political violence have all included economic variables, the intersection between economic variables and violence will be highlighted next (slightly out of order from Chapter III).

H_4: Economic Climate and Violence

Economic climate was hypothesized to have a direct (+) effect on violence in the present study. This hypothesis was strongly supported by the data. Violence climate was directly related to the measures of poverty chosen for this study (Economic Climate Scale and Elder Economic Climate Scale). Regression analysis demonstrated that Economic Climate Scale accounted for 44.2 percent of the differences in violence climate and Elder Economic Climate Scale explained 43.1 percent of the variance in violence climate for the models involving suicide rates. The most helpful indicators for predicting violence was literacy and poverty among the general population and literacy, retirement, and disability status among elders. The explanatory power was more pronounced when dealing with firearm suicide. Economic Climate Scale and Elder Economic Climate Scale, for example, were helpful in explaining 61.2 and 60.1 percent of the respective differences in violence climate (Violence Index-R) from state to state. There was also a pronounced indirect effect on suicide, but that will be discussed later in this chapter.

These findings were not too surprising, given the extensive literature on poverty and violence (Gastil, 1971); Hackney, 1969; Kowalski, Fauple, & Starr, 1987; Lester, 1989; Loftin and Hill, 1979; Parker, 1989; Stolzenberg & D'Alessio, 2000). For example, Parker (1989) controlled for economic factors, but still found sufficient evidence of the subculture of violence (Gastil-Hackney hypothesis). In other words, economic factors do contribute significantly, but do not explain the whole picture, just as the data from the present study suggests the economic factors account for less than half. Nonetheless, the original hypothesis was supported and further follows the trends in the literature.

H_3: Political Climate and Suicide

The political climate hypothesis was supported, because the relationship of SEC-R was found to be indirectly related to suicide by influencing the access to guns and the influence of PCS-R on violence climate. There is not a direct relationship of either political climate indicator on suicide, firearm suicide, elder suicide, or elder firearm suicide. Federal Election Commission-Revised was found to directly influence gun access and was the most significant predictor of gun access in the portion of the mediational model where gun access is the criterion. The strength of support for the Republican candidate the Presidential elections (Federal Election Commission-Revised) was directly related to lower scores on the Gun Access Scale (β=-.55, C.R.=-6.058, $p <$ .001) and the indirect effects of political influence on gun access was also something important to notice. Federal Election Commission-Revised explained nearly 18.5 percent of the differences in suicide and 15.8 percent of the differences in elder suicide *by itself*, because of the influence it had on gun access. When discussing firearm suicide rates, the influence is much greater: 30.5 percent for firearm suicide and 21.9 percent

for elder firearm suicide. This makes it even more salient to take notice of the political action committees' power in state and federal elections. The comment highlighted previously in the manuscript about the NRA helping George W. Bush become president, is particularly poignant. The political climate on gun laws and subsequently on firearm suicide must be one of the most salient "take home" points of this study. Political influence on firearm suicide rates (through the influence on gun laws) was found to be indirectly powerful for predicting the differences from state to state.

H_5: Economic Climate and Suicide

Economic climate was hypothesized to have an indirect effect on suicide rates through the influence that poverty has on violence and gun access. Both parts of this hypothesis were supported strongly by the findings. As highlighted earlier, Economic Climate Scale and Elder Economic Climate Scale have direct influence on violence in the respective states. The levels of violence were found to be helpful and significant predictors of suicide, gun suicide, elder suicide, and elder gun suicide. Both the direct and indirect impact of poverty appeared from the data to have a more pronounced influence on firearm suicide and elder firearm suicide than overall suicide and elder suicide, although all those relationships were significant predictors. For example, the direct effect of economic climate on violence was 40.2 percent when the criterion is overall suicide, but 61.2 when it was gun suicide. The indirect effect of economic climate on suicide was 7.5 percent (by itself), because of the influence on levels of violence, whereas the indirect effect was much higher, 18.1 percent, in the area of gun suicide. This difference was not nearly as pronounced among the elder models: 14.8 percent (economic indirect effects on elder suicide) and 19.2 percent (on elder gun suicide).

It was interesting to think about what might have driven these differences in the results. The elder suicide rate was much more heavily influenced by the elder gun rate, partly because of the smaller numbers and partly because there was a dramatic difference in percentages of people who chose guns overall (57 percent) and elders who chose to die by suicide with guns (73 percent) for the year data were collected.
One particular part of this puzzle seemed contradictory: the higher the rates of poverty (not income) the higher the rates of gun suicide. This relationship was direct and positive for gun suicide and elder gun suicide. Because poverty and education are strongly correlated, one explanation could be that those with less education and higher poverty could have less resources for problem solving and coping and that these things could affect the rates of suicide broadly. In future studies, it might be helpful to collect the suicide rates for males, low-income, and low-education separately to disentangle these effects. A word of caution is helpful here, it is important to not commit an ecological fallacy in assuming that increased poverty means the poorest individuals are the ones who killed themselves. The data were aggregate and de-identified, so it is not possible to answer the individual-level question about financial means and the ability a low-income person has to obtain a gun. The conclusion can be drawn, based on the data, that states with less economic opportunity (more poverty, higher rates of functional illiteracy, higher rates of disability, lower rates of high school graduates, and more single-parent households) have higher rates of suicide.

The theoretical literature does not help explain the connection. There are very few studies that examine economic contributors to suicide directly. Most have connected economic variables with other kinds of violence as highlighted earlier (Gastil, 1971; Hackney, 1969; Kowalski, Fauple, & Starr, 1987; Lester, 1989; Loftin

and Hill, 1979; Parker, 1989; Stolzenberg & D'Alessio, 2000). One study examined state-level data using a pooled time-series design to control for effects of time, subdivisions, individual effects, and unexplained variables (Kunce & Anderson, 2002). Several of the variables were similar to the present study (divorce, single-headed households and rates of poverty), but they found the economic variables to have little to no effect on the state suicide rates. The limitation of that study was they only looked at the 15-24 age group (Kunce & Anderson, 2002), so this connection is far from definitive. The lack of economic opportunity and higher rates of suicide appear to be strongly related in the present study and more research is specifically warranted to better understand the effects of economic variables on suicide.

$H_{6\text{-}8}$: Status Integration, Violence, and Suicide

Status integration was hypothesized originally to be inversely related to violence, inversely related to suicide (both directly and indirectly via violence or gun access). One of the more important findings of this study was how strongly the economic variables and status integration predictors were related. As highlighted in Chapter V, most of the indicators chosen for status integration have never been tested directly with economic variables in the same study. It is likely that many, if not the majority of the findings on status integration and suicide might be indirectly measuring poverty or some similar predictor. Gender and divorce were included in the model because of the lack of multicollinearity with the other variables in the model. Retirement and disability were so highly correlated that they were included instead with the Economic Climate Scale and Elder Economic Climate Scale (and both were demonstrably helpful to the model in the end). It was surprisingly difficult to find a coherent scale of status integration. Divorce and gender were retained, but there was

not a scale of status integration as originally hypothesized. There was at least a little consolation that other scholars have had similar problems with finding a coherent measure of status (McIntosh et al., 1994; Gibbs, 1964/2001, p. 7).

The findings from the present study were clearly in line with the previous theory about divorce and gender. Both have been well established risk factors both in individual experimental studies and in aggregate cross-sectional designs (Conwell et al., 2002; De Leo et al., 2001; Luoma & Pearson, 2002; Kaprio, Koskenvuo, & Rita, 1987; McIntosh et al., 1994; Travato, 1991). What was particularly significant was the magnitude of these two variables in the theoretical models. Male gender had significant predictive power directly on suicide overall, gun suicide, and elder suicide, but not elder gun suicide. The percentage of males explained 48.7 percent of the differences in suicide rates from state to state and 35.4 percent of the differences in gun suicide rates. The variable explained 34.5 percent of elder suicide rates and only 21.8 percent of elder gun suicide rates (and was not significant). Also, there was not a significant relationship between male gender and violence or gun access, which was a bit of a surprise. States with higher concentrations of men were found to be no more likely to have higher rates of violence or differences in gun legislation from state to state. Finding increased percentages of males related to increased suicide is not a surprise, since it has been well documented over the year that men tend to complete suicide four times more often than women, but women tend to attempt significantly more often than men. Shenassa, Catlin, and Buca (2003) found men to complete 4.5 times more often than women, which was very similar to the finding in the present study.

The results for divorce involve some puzzling findings. Divorce was found to have a significant effect on gun access. In fact, the variable (divorce) explained 40.7

percent of the differences in gun legislation and had discernable indirect effects on suicide through gun access. The most obvious explanation is measurement issues and misspecification of the model in some way. Another possible explanation could be that divorce and gun access were both tapping an unidentified latent construct, since they are both within the jurisdiction of the legislative and judicial systems. The same legislators who pass gun laws also pass laws pertaining to divorce, so there could be a strong influence on both that was not identified in this study. Another similar possibility could be that both Gun Access Scale-Revised and divorce were tapping a latent cultural or moral construct, which influences people in the state to value liberty more highly than others (divorce being liberating for some)?

The literature does not offer much help in this area, since there have been no published studies comparing divorce and gun laws, or teasing out the experimental predictors of gun ownership after a divorce. Vigdor and Mercy (2001) conducted a study about the impact of laws designed to disarm partners who have been convicted of domestic violence. Because outcome measures for domestic violence are hard to obtain, they used a proxy of domestic homicide. They did find that divorce law was highly related to the future passing of domestic violence law and future passing of restraining order law (Vigdor & James, 2001), but since it was not the focus of the study, there were no discussions about why this occurred. They did conclude, “It is possible that the effect we find for the restraining order laws is a result of some omitted or contemporaneous factor and the result of the restraining order laws” (p. 199). Clearly this is an area which warrants further investigation. Divorce and gun access have a relationship that was too strong to ignore and it certainly piques one’s curiosity about the antecedents of both.

H_9: Gun Access and Violence

It was hypothesized initially that gun access and violence climate were directly related to each other and that was only partially true for the present study. Gun access was not significantly related to violence climate, but violence climate was a strong predictor of gun access. For each of the models—suicide, firearm suicide, elder suicide, and elder firearm suicide—violence climate was directly predictive of gun access. In the case of suicide overall, Violence Index 2000 explained 41.8 percent of the differences between state scores on the Gun Access Scale-Revised. Even more significant, was the role it played in gun suicide, elder suicide, and elder gun suicide; each had similar results with around 50 percent of the differences in gun access were explained by the levels of violence in each state. The hypothesized direction was as expected here as well. Gun access was coded as lower scores meaning less control/pro-gun rights. Higher levels of violence were directly related to less regulation and more leniencies with regard to the gun access laws. Rape, robbery, and homicide were individually found to be significant predictors of gun access. As the rates of homicide increased in the states, one could predict a lowering of the Revised Gun Access Scale. In other words, states with higher rates of crime were found to be in the states where the gun laws were more lenient.

The finding of gun access not significantly predicting violence rates was similarly reported in the literature. Kunce and Mercy (2001) reported mixed results in the studies they reviewed and "cautiously concluded" that laws restricting access to firearms by abusers could lead to slight reductions in domestic partner homicides. While this is not exactly the same process as the present study, they stated that the relationship of gun access (restriction) was consistent with slightly reducing the

violence for a select subgroup of people. There were some effects of gun access on violence rates, but the relationship was not significant enough to risk saying this did not happen by chance. The tentative nature of Kunce and Mercy's research indicates similar results as the present study.

H_{10}: Violence and Suicide

The hypothesis testing the relationship of violence and suicide was supported as originally stated. Violence climate was found to be directly, positively related to suicide in the present study. States with higher rates of violence did have significantly higher rates of suicide even when controlling for effects of gender, marital status, poverty, partisanship, and gun access. Directly, violence contributed 9.4 percent of the explanatory power of the model with suicide rates and indirectly, violence helped to explain 14.2 percent (through gun access). These data demonstrated that states with higher rates of violence also had higher rates of suicide and states with lower rates of violence had lower rates of suicide in 2000. Similarly, the direct effects of violence on gun suicide were significant, lending 19.5 percent of the explained variance through direct effects and 27.4 percent through indirect effects (via gun access). The results for elders was similarly powerful; violence climate helped explain 23.9 percent of the differences in elder suicide rates directly and 20.1 percent indirectly (through gun access). Violence was also helpful as a mediator in understanding elder gun suicide. The direct effect of violence on elder gun suicide was 18.8 percent of the explained variance and 14.5 percent of the explained variance indirectly with elder gun suicide. The hypotheses of the direct positive relationship of violence and suicide were strongly supported by these tests and data.

Previous work has not examined violence and suicide in quite the same way and cannot offer much guidance in the way of support or refuting these findings. Some studies have examined suicide and homicide as parallel phenomena (Clarke & Lester, 1989; Cukier, 1998; HELP Network, 2003; Kleck, 2004; United Nations Social & Economic Council, 1997). The study most relevant to the present study is Vigdor & Mercy's (2003) study of gun laws and the impact they have had on domestic violence. The key independent variable, though, was the gun laws, rather than other kinds of violence as a mediator. They did find that the rates of homicide, other violent crime, and property crimes were strongly correlated with each other, as they were in the present study. It appears that more work is needed in the area of violence and suicide.

H_{11}: Gun Access and Suicide

The most significant finding was the strength of the relationship of gun access with suicide. Gun access directly (alone), explained 33.9 percent of the differences in suicide rates, 54.7 percent of the gun suicide rates, 40.5 percent of the elder suicide rates, and 29.2 percent of the elder gun suicide rates. In each model, states with lower scores on the Gun Access Scale-Revised had higher rates of suicide. States with more gun control (higher scores on the Gun Access Scale-Revised) had lower rates of suicide, gun suicide, elder suicide, and elder gun suicide. Also interesting was the finding that around 62 percent of the differences in gun access were explained by divorce rates, percentage of people who voted for the Republican candidate, the rates of violence in each state, and the level of poverty from state to state.

The findings of gun access and suicide can be added to the mixed results of previous research on firearms and suicide. Several studies found that gun rights legislation was not related to increased levels of violence (Kleck, 2004) or associated

with reduced violence (Lott, 1998). Others have found that gun access was associated with higher rates of suicide among youth (Boyd, 1986; Boyd & Moscicki, 1986; Brent, 2001; Joe & Kaplan, 2002), among the general population (Cantor & Baume, 1998; Killias et al., 2001; Wintemute et al., 1999), among men (Cutright & Fernquist, 2000; Duggan, 2003; Joe & Kaplan, 2002; Romero & Wintemute, 2002), among women (Kaplan et al., 1998; Miller et al., 2002) and among elders (Conwell et al., 2002; Shenassa, Catlin, & Buca, 2003). Studies of gun legislation and suicide have also found a strong effect on more lenient gun laws and higher rates of suicide among the general population (Cantor & Slater, 1995; United Nations Economic and Social Council, 1997), among men (Cukier, Sarkar, & Quigley, 2000), and among youth (Sloan, Rivara, Reay, Ferris, & Kellerman, 1990). Studies have also found no effect of gun laws on violence (Christie, 1999; Hahn et al., 2003; Kleck, 2004; Vigor & Mercy, 2003). The present study adds to the literature that supports gun control legislation as a means to reduce the suicide rate, firearm suicide rate, elder suicide rate, and elder gun suicide rate.

H_{12}: The Theoretical Model and Suicide

Finally, the hypothesis of the full models fitting the data well was strongly supported. The fit statistics all pointed to well-fitting models and were well within range for the recommended thresholds. The inadequacy of the sample size was expected and unavoidable, given the number of states in the US. The preponderance of evidence for the other fit statistics, suggests that the models were still well-fitting for the data, despite the small sample size. The most important contributors to the overall model were gun access, divorce, and male. These three variables explained 75.4 percent of the differences in suicide (out of 76.2 percent of the total variance explained

with all the variables), 74.2 percent of the differences in gun suicide (out of 76.8 percent), 51.0 percent of the differences in elder suicide rates (out of 56.1 percent), and 52.5 percent of the differences in elder gun suicide rates (out of 53.4 total percent explained). Clearly, the three most important variables for the overall models were divorce rates, male gender, and gun access.

As previously highlighted, the literature does not offer much direction with regard to the full models and similarities or differences from previous findings. Other researchers have not simultaneously focused on political, economic, status, violence, and gun access variables in previous work. The nearest example of a comprehensive model of elder suicide was completed by Rogers, Lewis, and Oney (2003). This model of elder suicide approached prediction from a psychological standpoint, had a large sample, employed highly reliable instruments for depression and anxiety, but the model did not include gun access measurement. Another limitation was that the assisted-living sample (N=350) they studied was 75.4 percent female, which does not adequately represent elders generally or those most at risk of elder suicide—men. Unfortunately, the data did not fit the theoretical model and were not particularly helpful in predicting suicide among older adults (J. Rogers, personal communication, April, 23, 2003).

Limitations

This study, as any research, had some limitations that need to be stated. The present study used state-level aggregate data and statistics that are based on experimental theory. The study used the data collected by others, mostly Federal sources, that were collected by someone else and as such, much of the quality was not within the researcher's control. The design of the study was aimed toward using population based data in the hopes of generalizability. The problem with this lack of

control, is that the variables can be under the influence of multiple confounding latent mediators that were not observable. Another limitation was the fact that the models were not as helpful for explaining elder suicide and elder gun suicide. The predictive models were much more useful for overall suicide rates and firearm suicide rates. Clearly, much more work is needed in the area of elder firearm suicides. Another limitation is the reliance on legal channels for measuring gun access. There are many more illegitimate ways to obtain firearms and that is an area of much needed work.

Several important factors learned through this dissertation can help future researchers in the areas of gerontology and suicidology. The measures of economic climate were highly related to the status integration measures chosen and future work would be helpful in learning more about why this is true and how much of the previous work in both of these areas is confounded by the measurement of one or the other. Also, the small sample was clearly a problem with the present study. Future work is suggested using PLS estimation for these data. While the data were a good fit for the model, some of the more elegant statistical properties of SEM were not possible, simply because of sample size. The study did have many key findings that could be helpful for direction in future studies. It is important to understand that there are some important implications learned from this study which could be immediately useful for theory development, prevention programs, and practice.

Implications

Comprehensive theory development

The present study is important for several key reasons. First, comprehensive theory development is necessary to address the complex issue of firearm suicide in the United States. The increasing number of elders who die by suicide has pressing

implications for practice, policy-making, education and research. Social workers are trained to think systemically, to work with people in their environment, to research multilevel social problems, and to advocate for people whose needs are not getting met by the larger society. Elder firearm suicide is a strong example of a preventable public health issue facing our society. For example, many older adults attempt suicide in Indiana because they are lonely or physically declining (Shen, 2002) and this is likely due to the lack of services and suicide prevention programs in the state. Firearm access is a policy issue that can also be addressed by social workers. Research demonstrates that restricting means significantly reduces the rates of suicide. "Evidence from many countries and cultures shows that limiting access to lethal means of self-harm may be an effective strategy to prevent self-destructive behaviors" (National Mental Health Information Center, 2003, p. 3). While there are many programs aimed at preventing youth suicide (Jenkins & Kovess, 2002; Lester & Yang, 1994; O'Connor, Sheehy, & O'Connor, 1999), there are few programs geared toward preventing suicide among the oldest group (McIntosh et al., 1994). This study contributes to the theoretical knowledge base by adding a comprehensive framework of analysis and a predictive model useful for prevention.

International prevention context

A second reason this present study is significant is that the international suicide prevention context is ripe for change and exposure of the problem through research is the first step in reducing and preventing suicide. Several international efforts have been developed to research, design, and implement social policy in order to reduce the public health problem leading to so many suicide fatalities. Several countries have developed national and international prevention projects. The Office for National Statistics' national database of deaths from drug poisoning and overdose in England and Wales (Shah, Uren, Baker, & Majeed, 2002) and the Prevention of Suicide publication (Department of Health, UK, 1994) are two such examples. Finland also has a national prevention effort aptly titled, The National Suicide Prevention Project (Aro & Henriksson, 1995) with a goal of reducing the number of suicides in the country by 20 percent in the next 10 years. This is important for firearm suicide research because Finland's suicide rates are among the highest in the world, reaching approximately 44.9 deaths per 100,000 residents in 1993 and half of Finnish households own guns (Cukier, 1998). Australia has a similar project, the National Plan for Suicide Prevention Project, with a goal of reducing the suicide rate by 15 percent over 20 years (Snowdon & Baume, 2002). The United Nations (2003) has outlined critical arenas in the area of aging population research, including: social participation and integration, macro-societal change and development, healthy ageing, physical and mental functioning, and policy process evaluation. These research areas have not been widely emphasized in the US, but there have been important developments internationally that can inform US efforts.

US prevention context

The third reason the present study is important, is that the United States may becoming ready for changes in the methods of prevention. The former Surgeon General, Dr. David Satcher called suicide a "major public health problem" (US Public Health Service, 1999) and designed an initiative with 11 goals and 68 objectives designed to create 'cultural change' in the US regarding suicide. The National Strategy is the largest US attempt to formulate policy on this issue. The National Strategy has led to the allocation of new resources for program development, research, and education on the issue of suicide prevention. Epidemiologic data indicate that not only are elders at the highest risk for suicide, but their risk profile differs from younger groups. Continued research is needed in order to better understand where and how elders obtain their weapons and how to best reach them before the point of gun suicide. It would also be helpful to conduct large, experimental studies that could separate the interactive effects of gun policy and prevention programs on suicide rates.

The fourth reason this study was needed is because there has been so little research on the ways that the gun culture, gun policy, and gun access has affected the suicide rates among elders, the firearm suicide rates among the general population, and overall suicide rates. The HELP network, a grassroots advocacy organization directed at reducing gun violence in the United States has stated that our acceptance of gun violence has passed the stage of "epidemic" proportions and we are now experiencing an "endemic" phenomenon of gun violence in our lives. The press release was made shortly after the release of the 2002 mortality data in which HELP stated, "Endemic disease is always present in an area: diseases are epidemic when they are rising well above historic levels' (HELP Network, 2005, p. 1). The US culture values an

individual's right to bear arms despite significant evidence of increased rates of collective violence. One bi-product of a high firearm death rate is that around 80 people die from firearm injuries per day, including 46 gun suicides and 11 elder gun suicides (CDC, 2002; Gun Control Network, 2003).

The US has a serious problem with suicide and other forms of violence, but researchers, policymakers, and advocates (both for gun rights and gun control) differ in the best approach for reducing this violence. Some argue that increased gun ownership reduces crime (Lott, 1998) and that previous research about guns and crime was not credible (Kleck, 2004). Others argue that the US's irresponsible gun policies not only affect violence within the United States, but around the world through legal and illegal trafficking from the US to other countries (Cukier, Sarkar, & Quigley, 2000).

Summary

Comprehensive, theory-building research is the first step toward developing adequate gun policies and suicide prevention programs. Through a deeper understanding of the ways our gun culture influences violent self-harm, we can outline evidence-based practice, design protective policies, and design adequate prevention programs. Comprehensive, multi-systemic research can best inform social work practice as well as the interdisciplinary fields of gerontology and suicidology. Our commitment to social justice and non-violence should extend further than our proverbial backyard, because social research has the potential to improve the quality of life for elder clients across the globe through evidence-based policy making and advocacy. Van Wormer (1997) maintains that the social work profession's commitment to social justice, coupled with international policy knowledge and skills can produce leaders in the US and other countries who will help the world's people work for justice and non-violence.

The sociological autopsy approach can provide much-needed evidence to inform decision-making, advocacy, policy making, practice, and education in the United States and other countries, which are all facing the alarming issue of elder suicide.

APPENDIX A: Suicide & Depression Assessment Instruments

Beck Depression Inventory (BDI; Beck, Ward, Mendleson, Mock, & Erbaugh, 1961)

Brief Symptom Inventory (BSI; Scocco & De Leo, 2002)

Center for Epidemiological Studies Depression Scale (CES-D; Radloff, 1977)

Geriatric Depression Scale (GDS; Brink, Yesavage, Lum, Heersema, Adey, & Rose, 1982; Yesavage, Brink, Rose, Lum, Huang, Adey, & Leirer, 1983)

Hamilton Rating Scale for Depression (Ham-D; Hamilton, 1960)

Hopelessness Scale (HS; Beck, Weissman, Lester, & Trexler, 1974)

Millon Clinical Multiaxial Inventory I & MCII-II (MCMI; Lall, Bongar, Johnson, Jain, & Mittauer, 2000; Millon, 1982, 1987)

Reasons for Living Inventory (RFL; Linehan, Goodstein, Nielsen, & Chiles, 1983)

Reasons for Living Inventory-Older Adult (RFL-OA; Edlestein, McKee, & Martin, 1999)

Risk of Suicide Questionnaire (Horowitz, Wang, Koocher, Burr, Fallon Smith, Klavon, & Cleary, 2001)

Scale for Suicidal Ideation (SSI; Beck, Kovacs, & Weissman, 1979)

Semantic Differential Scale-Attitudes towards Suicidal Behavior (SEDAS; Jenner & Neising, 2000)

Short Geriatric Depression Scale (GDS-S; Almeida & Almeida, 1999)

Suicide Assessment Checklist (SAC; Rogers & Alexander, 1994)

Suicidal Attitude Scale (SUIATT; Jenner & Neising, 2000)

Suicidal Intent Scale (SIS; Beck, Resnick, & Lettieri, 1978)

Suicidal Ideation Screening Questionnaire (SIS-Q, Cooper-Patrick, Crum, & Ford)

Suicide Ideation Questionnaire (SIQ; Beck, Kovacs, & Weissman, 1979; Guiterrez et al., 2000; Heisel, Flett, Besser, 2002; Horowitz et al., 2001)

Suicide Opinion Scale (SOS; Jenner & Niesing, 2000)

APPENDIX B

GRADING CRITERIA FOR Gun Access Scale[4]

Juvenile Possession and Sale/Transfer

Whether it is legal for a juvenile to possess a firearm without parental permission or supervision?

A +	(4.3)	must be 21 for all firearms
A	(4.0)	must be 21 for handguns, 18 for long guns
A-	(3.7)	must be 18 for all firearms must be 21 for handguns, 16 for long guns
B+	(3.3)	must be 18 for handguns, 16 for long guns
B	(3.0)	must be 21 for handguns, no age for long guns
B-	(2.7)	must be 18 for handguns, under 16 or no age for long guns
C	(2.3)	must be 16 for all firearms
D	(2.0)	must be 16 for handguns
F	(1.0)	none

Juvenile Sale/Transfer

Whether it is legal for a juvenile to own a firearm without parental permission or supervision?

A +	(4.3)	must be 21 for all firearms
A	(4.0)	must be 21 for handguns, 18 for long guns
A-	(3.7)	must be 18 for all firearms must be 21 for handguns, 16 for long guns
B+	(3.3)	must be 18 for handguns, 16 for long guns
B	(3.0)	must be 21 for handguns, no age for long guns
B-	(2.7)	must be 18 for handguns, under 16 or no age for long guns
C	(2.3)	must be 16 for all firearms
D	(2.0)	must be 16 for handguns
F	(1.0)	none

Child Access Prevention (CAP)

Whether adults are required to store their firearms responsibly and out of the reach of children and whether there are penalties for leaving guns accessible to children?

A	(4.0)	under 18, good penalties
A-	(3.7)	
B+	(3.3)	under 17, good penalties
B	(3.0)	under 16, good penalties
B-	(2.7)	under 15, good penalties
C	(2.3)	under 14, good penalties
D	(2.0)	
F	(1.0)	none

[4] This scale was adapted from the Brady Campaign's state report cards, 2001.

Locks/Design Standards (CSL)

Whether guns must be sold with child-safety locks (CSL) and/or include safety design features such as load indicators, magazine safety disconnects and restrictions on Saturday Night Special (SNS) "junk" guns?

A	(4.0)	Personalized guns, load indicators, magazine disconnects, SNS limits
A-	(3.7)	CSL, load indicators, magazine disconnects, SNS
B+	(3.3)	State/Police approved CSL for all firearms and some others of above
B	(3.0)	State/Police approved CSL for all firearms or strong SNS or strong others
B-	(2.7)	State/Police approved CSL but only for handguns
C+	(2.0)	Basic CSL or basic SNS (like melting test)
C	(2.3)	
D	(1.0)	
F	(0.0)	none

Carrying Concealed Weapons (CCW)

Whether individuals are allowed to carry loaded concealed guns and whether the police are forced to issue concealed carry permits or have some discretion to limit the carrying of concealed weapons in public?

A	(4.0)	no carrying allowed
A-	(3.7)	
B+	(3.3)	may issue with strong training, good limits, no reciprocity, 21 years old, good background check
B	(3.0)	may issue with training but weaker checks or standards, no reciprocity
B-	(2.7)	may issue with no training or poor limits
C	(2.3)	may issue, but no permit required in vehicles or reciprocity
C-	(1.7)	shall issue with training requirements, limits on where to carry, no reciprocity
D	(1.0)	shall issue with either no training or reciprocity
D-	(.70)	shall issue with no training and reciprocity or age 18
F	(0.0)	no permit needed to carry, or shall issue with no training, reciprocity and age 18

Preemption/Attorneys General Regulations

Whether the state has made it illegal for cities to enact stricter gun laws than exist in the state and whether the state attorneys general can pass rules for consumer safety without formal legislation?

A	(4.0)	no limits passed, attorney general can regulate
A-	(3.7)	no limits passed, no attorney general powers
B+	(3.3)	minimal limits, attorney general can regulate
B	(3.0)	minimal limits
B-	(2.7)	minimal limits, no attorney general powers
C+	(2.3)	moderate limits, attorney general can regulate
C	(2.3)	moderate limits
C-	(1.7)	moderate limits, no attorney general powers

D+ (1.3) preemption that was not retroactive or severe limits on city powers, attorney general can regulate
D (1.0) preemption that was not retroactive or severe limits on city powers
D- (.70) preemption that was not retroactive or severe limits on city powers, no attorney general powers
F (0.0) full preemption, no attorney general powers

Secondary Sales & Police Record Keeping

Whether there are regulations of gun sales by other than a Federally licensed gun dealer (gun shows or through the classified ads) and the background checks for secondary sales?

A (4.0) all secondary sales have background check & waiting period, police maintain records of all gun sales, partial registration at the police department
A- (3.7) all secondary sales have background check & waiting period, police maintain records, not registered with the police
B+ (3.3) all secondary sales of handguns have background checks & waiting periods, police keep records & have partial registration with the police
B (3.0) all secondary sales of handguns have background checks & waiting periods, police keep records, not registered with the police
B- (2.7) all secondary sales of handguns have background checks & waiting periods, police keep records & have partial registration with the police
C+ (2.3) gun show loophole closed (cannot buy guns through the classified ads), police keep records, have partial registration with the police
C (2.0) gun show loophole closed (cannot buy guns through the classified ads), police keep records, have partial registration with the police
C- (2.0) gun show loophole closed (cannot buy guns through the classified ads), do not keep police records, not registered with the police
D (1.0) can buy guns through the classified ads
F (0.0) none

Background Checks & Waiting Periods

Whether there are regulations of gun sales by Federally licensed gun dealers and background checks for gun sales?

A (4.0) must have permits for handguns & long guns, must have waiting period for handguns & long guns, must have state background check for handguns & long guns
A- (3.7) must have permits for handguns & long guns, must have waiting period for handguns & long guns, Federal background check for handguns & long guns
B+ (3.3) must have permits for handguns, must have waiting period for handguns, must have state background check for handguns & long guns
B (3.0) must have permits for handguns or must have waiting period for handguns, must have state background check for handguns
B- (2.7) must have waiting period for handguns, must have state background check for handguns

C+	(2.3)	must have waiting period for handguns, must have either state or Federal background check
D+	(1.3)	must have state background check on handguns
D	(1.0)	must have Federal checks on handguns
F	(1.0)	Federal checks only, no permits, no waiting periods

REFERENCES

Abdi, H. (2003). Partial least squares [PLS] regression. In M. Lewis-Beck, A. Bryman, & T. Futing (Eds.), *Encyclopedia of social sciences research methods* (pp. 792-795). Thousand Oaks, CA: Sage.

Achté, K. (1988). Suicidal tendencies in the elderly. *Suicide and Life-Threatening Behavior, 18,* 55-64.

Adamek, M., & Kaplan, M. (1996). The growing use of firearms by suicidal women, 1979-1992. *Suicide and Life-Threatening Behavior, 26,* 71-78.

Adler, A. (1963). *The practice and theory of individual psychology.* New York: Premier Books.

Adler, A. (1968). Suicide. In J. Gibbs (Ed.), *Suicide* (pp. 146-150). New York: Harper Row.

Akaike, H. (1987). Factor analysis and AIC. *Psychometrika, 52,* 317-332.

Alexander, J. (Ed.). (1988). *Durkheimian sociology: Cultural studies*. New York: Cambridge University Press.

Allison, S., Roeger, L., Martin, G., & Keeves, J. (2001). Gender differences in the relationship between depression and suicidal ideation in young adolescents. *Australian and New Zealand Journal of Psychiatry, 35,* 498-503.

Almeida, O., & Almeida, S. (1999). Short versions of the geriatric depression scale: A study of their validity for the diagnosis of a major depressive episode according to the ICD-10 and DSM-IV. *International Journal of Geriatric Psychiatry, 14,* 858-865.

American Psychiatric Association. (2003, July). Practice guideline for the assessment and treatment of patients with suicidal behaviors. *American Journal of Psychiatry,* 1-117.

American Psychological Association [APA]. (2000). Guidelines for psychotherapy with gay, lesbian, and bisexual clients. *American Psychologist, 55,* 1440-1451.

American Association of Suicidology [AAS]. (2003). *USA. Suicide: 2000 Final Official Data*. Retrieved on 4/5/03 from http://www.suicidology.org/associations/1045/files/2000datapg.pdf

Anderson, J. C., & Gerbing, D.W. (1998). Structural equation modeling in practice: A review and recommended two-step approach. *Psychological Bulletin, 103,* 411-423.

Arbuckle, J. (1997). *AMOS user's guide.* Chicago: SmallWaters.

Aro, A., & Henriksson, M. (1995). Fear of AIDS and suicide in Finland: A review. *AIDS Care, 7,* (5), 187-198.

Barnes, C. B. (1975). The partial effect of income on suicide is always negative. *American Journal of Sociology, 80,* 1454-1460.

Bartels, S., Dums, A., Oxman, T., Schneider, L., Arean, P., Alexopoulous, G., & Jeste, D. (2002). Evidence-based practices in geriatric mental health care. *Psychiatric Services, 53* (11), 1419-1431.

Beck, A., Kovacs, M., & Weissman, A.(1979). Assessment of suicidal intention: The scale for suicide ideation. *Journal of Consulting Clinical Psychology, 47,* 343-352.

Beck, A., Resnick, H., & Lettieri D. (Eds.), (1978). *The predication of suicide*. Bowie, MD: Charles Press, 45-56.

Beck, A., Rush, A., Shaw, B., & Emery, G. (1979). *Cognitive therapy of depression.* New York: Guilford Press.

Beck, A., Ward, C., Mendelson, M., Mock, J., & Erbaugh, J. (1961). An inventory for measuring depression. *Archives of General Psychiatry, 4,* 561-571.

Beck, A., Weissman, A., Lester, D., & Trexler, L. (1974). The measurement of pessimism: The Hopelessness Scale. *Journal of Consulting and Clinical Psychology, 42,* 861-865.

Bentler, P. M., & Bonett, D.G. (1980). Significance tests and goodness of fit in the analysis of covariance structures. *Psychological Bulletin, 88,* 588-606.

Bentler, P. M., & Dudgeon, P. (1996). Covariance structure analysis: Statistical practice, theory, and directions. *Annual Review of Psychology, 47,* 563-592.

Bentler, P. M., & Yuan, K.-H. (1999). Structural equation modeling with small samples: Test statistics. *Multivariate Behavioral Research, 34,* 181-197.

Beresford, D. (1987). *Ten men dead: The story of the 1981 Irish Hunger Strike.* London: Harper Collins.

Bernberg, J. (2002). Anomie, social change, and crime. *British Journal of Criminology, 42,* 729-742.

Bibby, J. F., Cotter , C. P., Gibson, J. L., & Huckshorn, R. J. (1982). Parties in state politics. In V. Gray, H. Jacob & K. Vines, (Eds.), *Politics in the American states: A comparative analysis, 4th Ed*., (pp. 59-96). Boston: Little Brown.

Bibby, J. F., Gibson, J. L., Cotter, C. P., & Huckshorn, R. J. (1983). Trends in American state party organizational strength, 1960-1980: Institutionalization in an era of electoral dealignment. *International Political Science Review, 4,* 21-27.

Bibby, J. F., Cotter , C. P., Gibson, J. L., & Huckshorn, R. J. (1990). Parties in State Politics. In V. Gray, H. Jacob, & R. B. Albritton, eds., *Politics in the American States: A Comparative Analysis, 5th Ed*., (pp. 85-122).Glenview, Illinois: Scott, Foresman/Little Brown.

Bibby, J. F., & Holbrook, T. M. (1996). Parties and elections. In V. Gray & H. Jacob (Eds.), *Politics in the American states: A comparative analysis, 6th Ed,* (pp. 78-121). Washington, DC: Congressional Quarterly Press.

Bibby, J. F., & Holbrook, T. M. (1999). Parties and elections. In V. Gray & H. Jacob (Eds.), *Politics in the American states: A comparative analysis, 7th Ed.* (pp. 80-122). Washington, DC: Congressional Quarterly Press.

Bibby, J. F., & Holbrook, T. M. (2003). Parties and elections. In V. Gray & H. Jacob (Eds.), *Politics in the American states: A comparative analysis, 8th Ed,* (pp. 87-130). Washington, DC: Congressional Quarterly Press.

Bollen, K. A. (1989). A new incremental fit index for general structural models. *Sociological Methods & Research, 17,* 303-316.

Bollen, K. A., & Long, J. S. (Eds.). (1983). *Testing structural equation models.* Newbury Park, CA: Sage.

Boomsa, A. (1982). The robustness of LISREL against small sample sizes in factor analysis models. In H. Wold, & K. Jöreskog (Eds.), *Systems under indirect observation* (pp. 149-173). New York: Elsevier-North Holland.

Borgida, E., Sullivan, J., Oxendine, A., Jackson, M., Riedel, E., & Gangl, A. (2002). Civic culture meets the digital divide: The role of community electronic networks. *Journal of Social Issues, 58,* 125-141.

Boyce, P., Carter, G., Penrose-Wall, J., Wilhelm, K., & Goldney, R. (2003). Summary Australian and New Zealand clinical practice guideline for the management of adult deliberate self-harm. *Australian Psychiatry, 11,* 2, 150-155.

Boyd, J. H. (1986). The increasing rate of suicide by firearms. *New England Journal of Medicine, 27,* 495-496.

Boyd, J. H., & Moscicki, E. K. (1986). Firearms and youth suicide. *American Journal of Public Health, 76,* 1240-1242.

Bozogan, H. (1987). Model selection and Akaike's information criteria (AIC): The general theory and its analytical extensions. *Psychometrika, 52,* 345-370.

Breitbart, W. (1990). Cancer pain and suicide. *Advances in Pain Research and Therapy, 16,* 399-412.

Brent, D. A., Perper, J. A., & Allman, C. J. (1987). Alcohol, firearms, and suicide among youth. *Journal of the American Medical Association, 257,* 3369-3372.

Brink T. L., Yesavage J.A., Lum, O., Heersema, P., Adey, M. B., & Rose, T. L. (1982). Screening tests for geriatric depression. *Clinical Gerontologist 1,* 37-44.

British Medical Association [BMA], (2004, February). Guidance from the Ethics Department. Retrieved 6/12/05 from: http://www.bma.org.uk/ap.nsf/Content/Firearms#Disclosurestoprotectthepatien

Brown, G. (nd). *A review of suicide assessment measures for intervention research.* Retrieved on 3/1/04 from www.nimh.nih.gov/suicideresearch/adultsuicide.pdf

Brown, G., Bruce, M., & Pearson, J. (2001). High risk management guidelines for elderly suicidal patients in primary care settings. *International Journal of Geriatric Psychiatry, 16,* 593-601.

Browne, M. W. (1982). Covariance structures. In D. W. Hawkins (Ed.), *Topics in applied multivariate analysis* (pp. 72-141). Cambridge: Cambridge University Press.

Browne, M. W., & Cudeck, R. (1993). Alternative ways of assessing model fit. In K. A. Bollen and J. S. Long (Eds.). *Testing structural equation models* (pp. 445-455). Newbury Park: Sage.

Browne, M. W., Mels, G., & Coward, M. (1994). Path analysis: RAMONA. In *SYSTAT for DOS: Advanced applications, Version 6 Ed.* (pp. 163-224). Evanston, IL: Systat.

Byrne, B. M. (2001). *Structural equation modeling with AMOS: Basic concepts, applications, and programming.* Mahwah, NJ: Lawrence Erlbaum Associates, Publishers.

Cantor, C.H., & Baume, P. J. (1998). Access to methods of suicide: What impact? *Australian and New Zealand Journal of Psychiatry, 32,* 8-14.

Cantor, C. H., & Slater, P. J. (1995). The impact of firearm control legislation on sucide in Queensland: Preliminary findings. *Medical Journal of Australia, 162,* 583-585.

Centers for Disease Control & Prevention, (2002). National Vital Statistics Reports, 50, 1-120.

Centers for Disease Control & Prevention, (2004). Deaths: Final data for 2002, 53, (5), 1-116.

Centers for Disease Control & Prevention. (2005). AIDS cases by exposure category, age, and race/ethnicity. *Data Warehouse on Trends in Health and Aging.* Retrieved 1/16/05, from www.CDC.gov/nchs/agingact.htm.

Chatterjee, P., & Bailey, D. (1993). False empowerment: Lessons from three sociological autopsies of community action. *Case Analysis,* (3) 2, 113-131.

Chenowyth, R. (1981). Suicide and the elderly. *Crisis, 2,* 106-116.

Chin, W. W. (1998). Issues and Opinions on Structural Equation Modeling. *MIS Quarterly, 22,* 7-16

Christie, L. (1999). Australian, gun controls: Should more be done? *Emergency Medicine, 11,* 95-101.

Clarke, J. W. (1998). Without fear or shame: Lynching, capital punishment an the subculture of violence in the American South. *British Journal of Political Science, 28,* 269-289.

Clarke, R.V., & Lester, D. (1989). *Suicide: Closing the exits.* New York: Springer Verlag.

Conwell, Y., & Duberstein, P. (2001). Suicide in elders. *Annals New York Academy of Sciences, 932,* 132-150.

Conwell, Y., Duberstein, P., Connor, K., Eberly, S., Cox, C., & Caine, E. (2002) Access to firearms and risk for suicide in middle-aged and older adults. *American Journal of Geriatric Psychiatry, 10,* 407-416.

Conwell, Y., Duberstein, P., Cox, C., Hermann J., Forbes, N., & Caine, E. (1998). Age differences leading to completed suicide. *American Journal of Geriatric Psychiatry, 6,* 122-126.

Conwell, Y., Rotenberg, M., & Caine. E. (1990). Completed suicide at age 50 and over. *Hospital and Community Psychiatry, 41,* 1334-1339.

Cook, P. J., & Ludwig, J. (2003). Guns and burglary. In J. Ludwig and P. J. Cook (Eds.). *Evaluating gun policy: Effects on crime and violence* (pp. 74-107). Washington, DC: The Brookings Institution.

Cooper, J. (1999). Ethical issues and the practical application in a psychological autopsy study of suicide. *Journal of Clinical Nursing, 8,* 467-475.

Cooper-Patrick, L., Crum, R. M., & Ford, D. E. (1994). Identifying suicidal ideation in general medical patients. *Journal of the American Medical Association,* 272(22), 1757-1762.

Cote, T., Biggar, R., & Dannenberg, A. (1992). Risk of suicide among people with AIDS: A national assessment. *Journal of the American Medical Association, 276,* 2066-2068.

Cukier, W. (1998). Firearms Regulation: Canada in the International Context. *Chronic Diseases in Canada*. April. 1998. Retrieved 4/5/03 from http://www.hc-sc.gc.ca/pphb-dgspsp/publicat/cdic-mcc/19-1/d_e.html

Cukier, W., Sarkar, T., & Quigley, T. (2000). Firearm regulation: International law and jurisprudence. *Canadian Law Review, 6* (1), 99-123.

Cumming, E., & Henry, W. E. (1961). *Growing old: The process of disengagement*. New York: Basic Books.

Cutright P., & Fernquist R. (2000). *Firearms and suicide: the American experience, 1926-1996. Death Studies, 24,* 705-719.

D'Augelli, A., & Patterson, C. (Eds.). (1995). *Lesbian, gay, and bisexual identities over the lifespan: Psychological perspectives.* New York: Oxford University Press.

Damianopolous, E. (1961). In E. Cumming & W. E. Henry. *Growing old: The process of disengagement*. New York: Basic Books.

Dannenberg, A., McNeil, J., Brundage, J., & Brookmeyer, R. (1996). Suicide and HIV infection: Mortality follow-up of 4147 HIV seropositive military service applicants. *Journal of the American Medical Association, 276,* 1743-1746.

Department of Health, UK (1994). *The prevention of suicide.* HMSO, London.

de Leo, D., Padonani, W., Scocco, P., Lie, D., Bille-Brahe, U., Arensman, E., Hjelmeland, H., Crepet, P., Haring, C., Hawton, K., Lonnqvist, J., Michael, K., Pommereau, X., Querejeta, I., Phillipe, J., Salander-Redenberg, E., Schmidtke, A., Fricke, S., Weinacker, B., Tamesvary, B., Wasserman, D., & Faria, S. (2001). Attempted and completed suicide in older subjects: Results from the WHO/EURO Multicentre study of suicidal behavior. *International Journal of Geriatric Psychiatry, 16,* 300-310.

de Vries, B., Bluck, S., & Birren, J. (1993). The understanding of death and dying in a life-span perspective. *The Gerontologist, 33* (3), 366-372.

Duberstein, P. & Conwell, Y. (1997). Personality disorders and completed suicide: A methodological and conceptual review. *Clinical Psychology: Science and Practice, 4,* 359-376.

Duberstein, P., Conwell, Y., Seidlitz, L., Lyness, J., Cox, C., & Caine, E. (1999). Age and suicidal ideation in older depressed inpatients. *American Journal of Geriatric Psychiatry, 7* (4), 289-296.

Duggan, M. (2003). Guns and suicide. In J. Ludwig & P. J. Cook (Eds.). *Evaluating gun policy: Effects on crime and violence* (pp. 41-67). Washington, DC: The Brookings Institution.

Durkheim, E. (1985). *Le suicide: 'Etude de sociologie. [Suicide: A sociological study*] (M. Thompson & K. Thompson, Trans.). New York: New York Free Press. (original work published in 1897).

Durlak, J. (1995). Understanding meta-analysis. In L. G. Grimm & P. R. Yarnold, *Reading and understanding multivariate statistics*. Washington, DC: American Psychologicial Association.

Edelstein, B., McKee, D., & Martin, R. (1999). Reasons for Living – Older Adults. Unpublished manuscript. Department of Psychology, West Virginia University.

Eitle, D., D'Alessio, S. J., & Stolzenburg, L. (2002). Racial threat and social control: A test of the political economic and threat of black crime hypothesis. *Social Forces, 81,* 557-576.

Ellis, A. (1962). *Reason and emotion in psychotherapy.* New York: Stuart.

Erikson, R., Wright, G., & McIver, J. (1993). *Statehouse democracy*. New York: Cambridge University Press.

Fan, X., Thompson, B., & Wang, L. (1999). Effects of sample size, estimation methods, and model specification on structural equation modeling fit indexes. *Structural Equation Modeling: A Multidisciplinary Journal, 6,* 56-83.

Farberow, N., (1980). *The many faces of suicide: Indirect self-destructive behavior.* New York: McGraw-Hill.

Farmer, R., & Rohde, J. (1980). Effect of availability and acceptability of lethal instruments on suicide mortality. *Omega, 3,* 111-119.

Fassinger, R. (1997). Issues in group work with older lesbians. *Group, 21,* 191-210.

Faulkner, A., & Cranston, K. (1998). Correlates of same-sex behavior in a random sample of Massachussetts high school students. *American Journal of Public Health, 88,* 262-266.

Fergusson, D., Horwood, L., & Beautrais, A. (1999). Is sexual orientation related to mental health problems and suicidality in young people? *Archives of General Psychiatry, 56,* 876-880.

Fishbain, D. A., Goldberg, M., Rosomoff, R.S., & Rosomoff, H. (1991). Completed suicide in chronic pain. *Clinical Journal of Pain, 7,* 29-36.

Fishman, D. (2000). Transcending the efficacy versus effectiveness debate: Proposal for a new, electronic 'Journal of Pragmatic Case Studies.' *Prevention and Teatment, 3,* 8. Retrieved on 6/10/03 from http://journals.apa.org/prevention/volume3/pre0030008a.html

Fornell, C. & Bookstein, F. L. (1982). Two Structural Equation Models: LISREL and PLS Applied to Consumer Exit-Voice Theory. *Journal of Marketing Research 19* (4), 440-452.

Frey, R. S., Dietz, T., & Kalof, L. (1992). Characteristics of successful American protest groups: Another look at Gamson's *Strategy of Social Protest*. *American Journal of Sociology, 98* (2), 368-87.

Freud, S. (1963). Mourning and melancholia. In P. Reiff (Ed.), *General psychological theory: Papers on metapsychology* (pp. 164-179). New York: Collier.

Frost, J. (1997). Group psychotherapy with the gay male: Treatment of choice. *Group, 21,* 267-285.

Gabor, T. (1978). Crime displacement: The literature and strategies for investigation. *Crime and Justice, 6,* 100-106.

Garlow, S. J. (2002). Age, Gender, and Ethnicity Differences in Patterns of Cocaine and Ethanol Use Preceding Suicide. *American Journal of Psychiatry. 159,* 615-619.

Garnets, L., Hancock, K., Cochran,S., Goodschilds, J., & Peplau, L. (1991). Issues in psychotherapy with lesbians and gay men: A survey of psychologists. *American Psychologist, 46,* 964-972.

Garofalo, R., Wolf, C., Wissow, L., Woods, E., & Goodman, E. (1999). Sexual orientation and risk of suicide attempts among a representative sample of youth. *Archives of Pediatric and Adolescent Medicine, 153,* 487-493.

Gastil, R. P. (1971). Homicide and a regional culture of violence. *American Sociological Review, 36,* 412-427.

Geladi, P. (1992). Herman Wold, The Father of PLS. *Chemometrics and Intelligent Laboratory Systems, 15* (1), R7-R8.

Gibbs, J. (1969). Marital status and suicide in the United States: A special test of the status integration theory. *American Journal of Sociology, 74*, 521-533.

Gibbs, J. (1982). Testing the theory of status integration and suicide rates. *American Sociological Review, 47,* 227-237.

Gibbs J. (1987). African-American suicide: a cultural paradox. *Suicide Life Threat Behavior, 27,* 68-79.

Gibbs, J. (2000). Status integration and suicide: Occupational, marital, or both? *Social Forces, 78* (3), 949-968.

Gibbs, J., & Martin, W. (1974). A problem in testing the theory of status integration. *Social Forces, 53*, 332-339.

Gibbs, J., & Martin, W. (1981). Still another look at status integration and suicide. *Social Forces, 59*, 815-823.

Gibbs, J., & Martin, W. (1964; 2001). *Status integration and suicide: A sociological study*. Eugene: University of Oregon Press.

Giddens, A. (Ed.). (1986). *Durkheim and the Politics of the State*. Stanford, CA: Stanford University Press.

Goldberger, A. S., & Duncan, O. D. (Eds.). *Structural equation models in the social sciences*. New York: Academic Press.

Goldblum, P.B., & Martin, D. J. (1999). Principles for the discussion of life and death options with terminally ill clients with HIV. *Professional Psychology: Research and Practice, 30* (2), 187-197.

Goldman, L., Nielsen, N., & Champion, H. (1999). Awareness, diagnosis, and treatment of depression. *Journal of General Internal Medicine, 14*, 569-580.

Goldston, D. B. (2000). Suicide assessment with children and adolescents. Unpublished manuscript, Department of Psychiatry and Behavioral Medicine, Wake Forest University School of Medicine, Winston-Salem, NC.

Goodwin, R. D., Marusic, A., & Hoven, C. (2003). Suicide attempts in the United States: The role of physical illness. *Social Science and Medicine, 56* (8), 1783-1788.

Gorey, K., Thyer, B., & Pawluck, D. (1998). Differential effectiveness of prevalent social work practice models: A meta-analysis. *Social Work, 43* (3), 269-278.

Gould, D. (June 16, 1981). The Sands case. *The Spectator*,12-14.

Graduate Institute of International Studies [GIIS]. (2005). *Small arms survey 2005.* New York: Oxford University Press. Retrieved 6/25/05 from http://www.smallarmssurvey.org/publications/yb_2005.htm

Graham, H. G., & Gurr, T. R. (Eds.), *Violence in America*. New York: Signet.

Gray, V., Jacob, H. & Vines, K. (Eds.) (1983), *Politics in the American states: A comparative analysis, (4th Ed).* Boston: Little Brown.

Gray, V., Jacob, H., & Albritton, R. B. (Eds.), (1990). *Politics in the American States: A comparative analysis, (5th Ed).* Glenview, Illinois: Scott, Foresman/Little Brown.

Gray, V., & Jacob, H., (Eds.), (1996). *Politics in the American states: A comparative analysis, (6th Ed).* Washington, DC: Congressional Quarterly Press.

Gray, V., Jacob, H., & Hanson, R. L. (Eds.), (1999). *Politics in the American states: A comparative analysis, (7th Ed).* Washington, DC: Congressional Quarterly Press.

Gray, V., & Hanson, R. L. (Eds.), (1990). *Politics in the American states: A comparative analysis, (8th Ed).* Washington, DC: Congressional Quarterly Press.

Grove, W., & Meehl, P. (1996). Comparative efficiency of informal (subjective, impressionistic) and formal (mechanical, algorithmic) prediction procedures: The clinical-statistical controversy. *Psychology, Public Policy, and Law, 2* (2), 293-323.

Gun Control Network. (2003). Retrieved on 3/30/03 from http://gun-control-network.org/facts.html

Hackney, S. (1969). Southern violence. In H. G. Graham and T. R. Gurr (Eds.), *Violence in America* (pp. 479-500). New York: Signet.

Hahn, R. A., Bilukha, O. O., Crosby, A., Fullilove, M. T., LIberman, A., Moscicki, E., Snyder, S., Tuma, F., & Briss, P. (October 3, 2003). First reports evaluating the effectiveness of strategies for preventing violence: Firearm laws. *Mortality and Morbidity Weekly Report, 52,* RR-14, 11-20.

Hamilton, M. (1960). A rating scale for depression. *Journal of Neurology, Neurosurgery and Psychiatry, 33,* 56-62.

Harris E. C., & Barraclough B. M. (1994). Suicide as an outcome for medical disorders. *Medicine, 73* (6), 281-298.

Harwood, D., Hawton, K, Hope, T., & Jacoby, R. (2002). The grief experiences of bereaved relatives and friends of older people dying through suicide: A descriptive case-control study. *The Journal of Affective Disorders, 72,* 185-194.

Havighurst, R. J. (1972). *Developmental tasks and education (3rd ed.).* New York: McKay.

Hawkins, D. W. (Ed.), *Topics in applied multivariate analysis*. Cambridge: Cambridge University Press.

Hawton, K., Arensman, E., Townsend, E., Bremner, S., Fledman, E., Goldney, R., Gunnell, D., Hazell, P., van Heeringen, K., House, A., Owens, D., Sakinofsky, I., & Traskman-Bendz, L. (1998). Deliberate self-harm: Systematic review of efficacy of psychosocial and pharmacological treatments in preventing repetition. *British Medical Journal, 317,* 441-447.

Hays, S., & Glick, H. (1997). The role of agenda setting in policy innovation: An event history analysis of living-will laws. *American Politics Quarterly,* (25), 497-516.

Heisel, M., Flett, G., & Besser, A. (2002). Cognitive functioning and geriatric suicide ideation: Testing a mediational model. *American Journal of Geriatric Psychiatry, 10* (4), 428-436.

Hemenway, D. (2004). *Private guns public health.* Ann Arbor: University of Michigan Press.

Hemenway D., & Miller, M. (2000). Firearm availability and homicide rates across 26 high-income countries. *Journal of Trauma, 49,* 985-988.

Hemenway, D., & Miller, M. (2002). Association of rates of household handgun ownership, lifetime major depression, and serious suicidal thoughts with rates of suicide across US census regions. *Injury Prevention, 8,* 313-316.

Herek, G. (1995). Psychological heterosexism in the United States. In A. D'Augelli and C. Patterson (Eds.)., *Lesbian, gay, and bisexual identities over the lifespan: Psychological perspectives* (pp. 321-346). New York: Oxford University Press.

HELP Network. (2003). National data. Retrieved on 2/25/03 from http://www.helpnetwork.org/frames/fact.state5.html

Hendricks, J. (1994). Revisiting the Kansas city study of adult life: Roots of the Disengagement model in social gerontology. *The Gerontologist, 34,* (6), 753-755.

Hobbs, F. B., & Damon, B. L. (1996). *65+ in the United States: Current population reports, special studies* (pp. 23-190). Washington, DC: US Bureau of the Census.

Hoelter, J. W. (1983). The analysis of covariance structures: Goodness-of-fit indices. *Sociological Methods and Research, 11,* 325-344.

Holbrook, T. M., & Van Dunk, E. (1993). Electoral competition in the American states. *The American Political Science Review, 87* (4), 955-962.

Holcomb, L., Neimeyer, R., & Moore, M. (1993). Personal meanings of death: A content analysis of free-response narratives. *Death Studies, 17,* 299-318.

Horowitz, L., Wang, P., Koocher, G., Burr, B., Fallon-Smith, M., Klavon, S., & Cleary, P. (2001). Detecting suicide risk in a pediatric emergency department: development of a brief screening tool. *Pediatrics, 107,* 1133-1137**.**

Hoyle, R.H. (Ed.), *Structural equation modeling: Concepts, issues, and applications*. Thousand Oaks, CA: Sage.

Hu, L.-T., & Bentler, P. M. (1995). Evaluating model fit. In R. H. Hoyle (Ed.), *Structural equation modeling: Concepts, issues, and applications* (pp. 76-99). Thousand Oaks, CA: Sage.

Hughes, S., & Neimeyer, R. (1990). Cognitive model of suicidal behavior. In D. Lester (Ed.), *Current concepts of suicide,* (pp. 1-28.). Philadelphia: Charles Press.

Jacob, H., & Vines, K. (Eds.), (1976). *Politics in the American states: A comparative analysis, (3rd Ed).* Boston: Little Brown.

Jansson, B. S. (2003). *Becoming an effective policy advocate.* Stamford, CT: Brooks/Cole.

Jansson, B. S. (2001). *The reluctant welfare state: American social welfare policies—past, present, and future.* Stamford, CT: Brooks/Cole.

Jenkins, R., & Kovess, V. (2002). Evaluation of suicide prevention: A European approach. *International Review of Psychiatry, 14,* 34-41.

Jenner, J., & Niesing, J. (2000). The construction of the SEDAS: A new suicide-attitude questionnaire. *Acta Psychiatrica Scandinavica, 102,* 139-146.

Joe, S., & Kaplan, M. S. (2002). Firearm-related suicide among young African American males. *Psychiatric Services, 53* (3), 332-334.

Jerger, A. (1979). Behavior theories and their application. In D. Hankoff & B. Einsidler (Eds.), *Suicide: Theory and clinical aspects.* (pp. 179-199). Littleton, MA: PSG Publishing.

Join Together Online. (2003). Florida Governor Jeb Bush thanks NRA for getting his brother elected President, 4/29/03. Retrieved on 5/1/03 from http://www.jointogether.org/gv/news/summaries/reader/0,2061,563037,00.html

Jöreskog, K. G. (1973). A general method for estimating a linear structural equation system. In A. S. Goldberger & O. D. Duncan (Eds.), *Structural equation models in the social sciences* (pp. 85-112). New York: Academic Press.

Judd, C. M., & Kenny, D. A. (1981). Process analysis: Estimating mediation in treatment evaluations. *Evaluation Review, 5* (5), 602-619.

Kaplan, M., Adamek, M., & Calderon, A. (1999). Managing depressed and suicidal patients: A survey of primary care physicians. *The Gerontologist, 39*, 417-425.

Kaplan, M., Adamek, M., & Martin, J. (2001). Confidence of primary care physicians in assessing the suicidality of geriatric patients. *International Journal of Geriatric Psychiatry, 16*, 728-734.

Kaplan, M., Adamek, M., & Rhodes, J. (1998). Prevention of elderly suicide: Physicians' assessment of firearm availability. *American Journal of Preventative Medicine, 15*, 60-64.

Kaplan, H., & Sadock, B. (1993). *Synopsis of psychiatry*. Baltimore: Williams & Wilkins.

Kaprio, J., Koskenvuo, M., & Rita, H. (1987). Mortality after bereavement: A prospective study of 95,647 widowed persons. *American Journal of Public Health, 77* (3), 283-287.

Kastenbaum, R., & Aisenberg, R. (1972). *The psychology of death.* New York: Springer.

Kellermann A. L., Rivara F. P., Somes G., Reay D. T., Francisco J., Banton J. G., Prodzinski J., Fligner C., & Hackman B.B. (1992). Suicide in the home in relation to gun ownership. *New England Journal of Medicine, 327*, 467-473.

Kelly, G. (1955). *The psychology of personal constructs.* New York: Norton.

Kelly, G. (1961). Suicide: The personal construct point of view. In N. L. Farberow & E. S. Shneidman (Eds.), *The cry for help* (pp. 255-280). New York: McGraw- Hill.

Kenny, P. J., & Rice, T. W. (1985). Party composition in the American states: Clarifying concepts and explaining changes in partisanship since the 1950s. *Political Behavior, 7* (4), 335-351.

Killias, M., van Kesteren, J., & Rindlisbacher, M. (2001).Guns, violent crime, and suicide in 21 countries. *Canadian Journal of Criminology, 43,* 429-448.

Kleck, G. (2004). Measures of gun ownership levels of macro-level crime and violence research. *Journal of Research in Crime and Delinquency, 41*, 3-36.

Kleepsies, P. & Dettmer, E. (2000). An evidence-based approach to evaluating and managing suicidal emergencies. *Journal of Clinical Psychology, 56* (9), 1109-1130.

Kline, R. B. (1998). *Principles and practice of structural equation modeling*. New York: Guilford Press.

Kotz, S., & Johnson, N. L. (Eds.), *Encyclopedia of Statistical Sciences,* Vol. 6. New York: Wiley.

Kowalski, G., Faupel, C., & Starr, P. (1987). Urbanism and suicide: A study of American counties. *Social Forces, 66* (1), 85-101.

Kreitman, N. (1988). Suicide, age, and marital status. *Psychological Medicine, 18,* 121-128.

Kunce, M., & Anderson, A. (2002). The impact of socioeconomic factors on state suicide rates: A methodological note. *Urban Studies, 39* (1), 155-162.

Lall, R., Bongar, B., Johnson, W. B., Jain, V., & Mittauer, M. (2000). Efficacy of the Millon Clinical Multiaxial Inventory-II in discriminating mental health patients with and without suicidal ideation. *Military Psychology, 11,* 423-432.

Lester, D. (1987). Availability of guns and the likelihood of suicide. *Sociology and Social Research, 71,* 287-288.

Lester, D. (1988). *Suicide from a psychological perspective*. Springfield, IL: Charles C. Thomas Publisher.

Lester, D. (1989). *Suicide: Closing the exits*. New York: Springer-Verlag.

Lester, D., & Murrell, M. (1980). The influence of gun control laws on suicidal behavior. *American Journal of Psychiatry, 137,* 121-122.

Lester, D., & Tallmer, M. (1994). *Now I lay me down.* New York: Charles Press.

Lester, D., & Yang, B. (1992). Social and economic correlates of the elderly suicide rate. In A. Leenaars, R. Maris, J. McIntosh & J. Richman (Eds.), *Suicide and the Older* Adult, (pp. 36-47). New York: Guilford.

Lemon, B., Bengston, V., & Peterson, J. (1972). An exploration of the activity theory of aging: Activity types and life satisfaction among the in-movers to a retirement community. *The Gerontologist, 27,* (4), 511-523.

Leenaars, A., Maris, R., McIntosh, J., & Richman, J. (Eds.), *Suicide and the older adult.* New York: Guilford.

Lewis-Beck, M., Bryman, A., & Futing, T. (Eds.), *Encyclopedia of social sciences research methods.* Thousand Oaks, CA: Sage.

Liddle, B. (1996). Therapist sexual orientation, gender, and counseling practices as they relate to ratings of helpfulness by gay and lesbian clients. *Journal of Counseling Psychology, 43,* 394-401.

Linehan, M., Goodstein, J., Nielsesn, S., & Chiles, J. (1983). Reasons for staying alive when you are thinking of killing yourself: The Reasons for Living Inventory. *Journal of Consulting and Clinical Psychology, 51,* 276-286.

Linehan, M. M., Armstrong, H. E., Suarez, A., Allmon, D., & Heard, H. L. (1991). Cognitive-behavioral treatment of chronically parasuicidal borderline patients. *Archives of General Psychiatry, 48,* 1060-1064.

Linehan, M. M., Heard, H. L. & Armstrong, H. E. (1993). Naturalistic follow-up of a behavioral treatment for chronically parasuicidal borderline patients. *Archives of General Psychiatry, 50,* 971-974.

Linehan, M. M., Tutek, D. A., Heard, H. L., & Armstrong, H. E. (1994). Interpersonal outcome of cognitive-behavioral treatment for chronically suicidal borderline patients. *American Journal of Psychiatry, 151,* 1771-1776.

Litman, R. (1967). Sigmund Freud on suicide. In E. Schneidman (Ed.), *Essays on self-destruction* (pp. 324-344). New York: Science House.

Litman, R.E., Curphey, T., Shneidman, E. S., Farberow, N. L., & Tabachnick, N. (1963). Investigations of equivocal suicides. *Journal of the American Medical Association, 184,* 924-929.

Loftin, C. & Hill, R. (1974). Regional subculture and homicide: An examination of the Gastil-Hackney thesis. *American Sociological Review, 39,* 714-724.

Lott, J. R. (1998). *More guns, less crime: Understanding crime and gun control laws.* Chicago: University of Chicago Press.

Luders, J. E. (2005). Civil rights success and the politics of racial violence. *Polity, 37* (1), 108-129.

Ludwig, J. & Cook, P. J. (Eds.), (2003). *Evaluating gun policy: Effects on crime and violence.* Washington, DC: The Brookings Institution.

Luoma, J., & Pearson, J. (2002). Suicide and marital status in the United States 1991-1996: Is widowhood a risk factor? *American Journal of Public Health, 92* (9), 1518-1522.

Luoma, J., Martin, C., & Pearson, J. (2002). Contact with mental health and primary care providers before suicide: A review of the evidence. *American Journal of Psychiatry, 159* (6), 909-916.

Maddox, G. (1966). Persistence in life-style among the elderly. *Proceedings on the 7th International Congress in Gerontology, 6*, 309-311.

Mahoney, M., (1991). *Human change processes: The scientific foundations of psychotherapy.* New York: Guilford.

McBee-Strayer, S., & Rogers, J. (2002). Lesbian, gay, and bisexual suicidal behavior: Testing a constructivist model. *Suicide and Life-Threatening Behavior 32*, (3), 272-283.

McDougal, G. (1993). Therapeutic issues with gay and lesbian elders. *Clinical Gerontologist, 14*, 45-57.

McInnis-Dittrich, K. (2002). *Social work with elders: A biopsychosocial approach to assessment and intervention.* Boston: Allyn & Bacon.

McIntosh, J. L., Santos, J. F., Hubbard, R. W., & Overholser, J. C. (1994). *Elder suicide: Research, theory, and treatment*. Washington, DC: American Psychological Association.

Menninger, K. (1938). *Man against himself.* New York: Harcourt, Brace, & World.

Merton, R. (1957). The bearing of sociological theory on empirical research. In *Social theory and social structure*. (pp. 95-99). Glencoe, IL: Free Press.

Miller, D., & Salkind, N. (2002). *Handbook of research design and social measurement (6th edition).* Thousand Oaks, CA: Sage.

Miller, J., Segal, D., & Coolidge, F. (2001). A comparison of suicidal thinking and reasons for living among younger and older adults. *Death Studies, 25*, 357-365.

Miller, M. Azarel, D., & Hemenway, D. (2002). Firearm availability and suicide, homicide, and unintentional death among women. *Journal of Urban Health: Bulletin of the New York Academy of Medicine, 79* (1), 26-38.

Millon, T. (1982). *Millon Clinical Multiaxial Inventory Manual* (3rd Ed.) Minneapolis, MN: National Computer systems.

Millon, T. (1987). *Millon Clinical Multiaxial Inventory II: Manual for the MCMI-II.* Minneapolis, MN: National Computer systems.

Moller, D. (1996). *Confronting death*. New York: Oxford University Press.

Moller, D. (2000). *Life's end: Technocratic dying in an age of spiritual yearning*. Amityville, NY: Baywood Publishing.

Morrow-Howell, N., Becker-Kemppainen, S., & Lee, J. (1998). Evaluating an intervention for the elderly at increased risk of suicide. *Research on Social Work Practice, 8* (1), 28-46.

Mulsant, B., Alexopoulos, G., Reynolds, C., Katz, I., Abrams, R., Oslin, D., & Schulberg, H. (2001). Pharmacological Treatment of depression in older primary care patients: the PROSPECT algorithm. *International Journal of Geriatric Psychiatry, 16*, 585-592.

National Mental Health Information Center (2003). *Challenging stereotypes: An action guide.* Retrieved 1/27/03 from http://www.mentalhealth.org/publications/allpubs/SMA01-3518/default.asp

National Rifle Association [NRA]. (2003). Retrieved on 3/15/03 from www.nrafoundation.org/friends

Neimeyer, R. (1983). Toward a personal construct conceptualization of depression and suicide. *Death Studies, 7,* 127-173.

Neimeyer, R., & Mahoney, M. (Eds.), (1995). *Constructivism in psychotherapy*. Washington, DC: American Psychological Association.

Noonan, R. B. (1979). *PLS path modeling with latent variables: Analyzing school survey data using partial least squares.* Stockholm: Institute of International Education, University of Stockholm.

Norberg, K. (2003). Guns and Suicide: Comment. In J. Ludwig & P. Cook (Eds.) *Evaluating gun policy: Effects on crime and violence.* Washington, DC: The Brookings Institution.

Nunnally, J. C., & Bernstein, I. H. (1994). *Psychometric theory* (3rd Ed.) New York: McGraw-Hill.

O'Connor, R., Sheehy, N., & O'Connor, D. (1999). The classification of completed suicide into subtypes. *Journal of Mental Health, 8,* (6), 629-637.

Oei, T., & Free, M. (1995). Do cognitive behavior therapies validate cognitive models of mood disorder? A review of the empirical evidence. *International Journal of Psychology, 30* (2), 145-179.

Ofstein, D. H. & Acuff, F.G. (1979). Durkheim and disengagement: A causal model of aging suicide. *Free Inquiry in Creative Sociology, 7* (2), 108-111.

Olzak, S. (1990). The political context of competition: Lynching and urban racial violence, 1882-1914, *Social Forces, 69* (2), 395-421.

Osgood, N. (1982). *Senior settlers.* Westport, CT: Greenwood.

Osgood, N. (1992). *Suicide in later life: Recognizing the warning signs.* Lanham, MD: Lexington.

Osgood, N., & Brandt, B. (1990). Suicidal behavior in long-term care facilities. *Suicide and Life-Threatening Behavior, 20* (2), 113-122.

Osgood, N., Brandt, B., & Lipman, A. (1989). Patterns of suicidal behavior in long-term care facilities: A preliminary report of an ongoing study. *Omega, 19* (1), 69-78.

Osgood, N., Brandt, B., & Lipman, A. (1991). *Suicide among the elderly in long-term care facilities*. Westport, CT: Greenwood Publishing Company.

Osman, A., Jones, K., & Osman, J. A. (1991). The Reasons for Living Inventory: Psychometric properties, *Psychological Report, 69* (1), 271-278.

Parker, R. N. (1989). Poverty, subculture of violence, and type of homicide. *Social Forces, 67* (4), 983-1007.

Parker, R. N. & Smith, M. D. (1979). Deterrence, poverty, and type of homicide. *American Journal of Sociology, 85,* 614-624.

Pearson, J., & Conwell, Y. (1995). Suicide in late-life: Challenges and opportunities for research. *International Psychogeriatrics, 7,* 131-135. In Pearson, J., Conwell, Y., Lindesay, J., Takahashi, Y., & Caine, E. (1997). Elderly suicide: A multi-national view, *Aging and Mental Health, 1* (2), 107-111.)

Pearson, J., Conwell, Y., Lindesay, J., Takahashi, Y., & Caine, E. (1997). Elderly suicide: A multi-national view. *Aging and Mental Health, 1* (2), 107-111.

Pedhazur, E. J. (1997). *Multiple regression in behavioral research* (3rd Ed.). Orlando: Harcourt Brace.

Peretti, P. O., & Wilson, C. (1978-1979). Contemplated suicide among voluntary and involuntary retirees. *Omega, 9,* 193-201.

Phillips, M., Li, X., & Zhang, Y. (2002). Suicide rates in China, 1995-99. *The Lancet,* 359, 835-840.

Phillips, M., Gonghuan, Y., Zang., Y., Lijuan, W., Huiyu, J., & Maigeng, Z.(2002). Risk factors for suicide in China: a national case-control psychological autopsy study. Lancet, 11/30/2002, Vol. 360 Issue 9347, 1728-1737.

Pirkis J., Burgess P., & Dunt D. (2000). Suicidal ideation and suicide attempts among Australian adults. *Crisis: Journal of Crisis Intervention and Suicide. 21* (1), 16-25.

Plott, R., Benton, S., & Winslade, W. (1989). Suicide of AIDS patients in Texas: A preliminary report. *Texas Medicine, 85,* 40-43.

Poggi, G. (2000). *Durkheim*. Oxford: Oxford University Press.

Quadagno, J. (1999). *Aging and the lifecourse: An introduction to social gerontology*. Boston: McGraw-Hill.

Radloff, L. (1977). The CES-D scale: A self-report depression scale for research in the general population. *Applied Psychological Measurement 1*(3), 385-401.

Rajs, J., & Fugelstad, A. (1992). Suicide related to human immunodeficiency virus, *Acta Psychiatrica Scandinavica, 85,* 234-239.

Ranney, A. (1965). Political parties in state politics. In H. Jacob & K. Vines, (Eds.) *Politics in the American states, (1st Ed.*), (pp. 45-88). Boston: Little Brown.

Ranney, A. (1976). Parties in state politics. In H. Jacob & K. Vines, (Eds.) *Politics in the American states: A comparative analysis, (3rd Ed.),* (pp. 51-92). Boston: Little Brown.

Raue, P., Alexopoulos, G., Bruce, M., Klimstra, S., Mulsant, B., & Gallo, J. (2001). The systematic assessment of depressed elderly primary care patients. *International Journal of Geriatric Psychiatry, 16,* 560-569.

Remafedi, G., Farrow, J., & Deisher, R. (1991). Risk factors for attempted suicide in gay and bisexual youth. *Pediatrics, 87,* 869-875.

Remafedi, G., French, S., Story, M., Resnick, M., Michael, D., & Blum, R. (1998). The relationship between suicide risk and sexual orientation: Results of a population-based study. *American Journal of Public Health, 88,* 57-60.

Rogers, J. (2001). Theoretical grounding: The missing link in suicide research. *Journal of Counseling and Development, 79,* 365-372.

Rogers, J., & Alexander, R. (1994). Development and psychometric analysis of the suicide assessment checklist. *Journal of Mental Health Counseling, 16,* 352-369.

Rogers, J., Lewis, M., & Oney, K. (2003, April). *Elder suicide: Modeling risk and protective factors.* Paper presented at the meeting of the American Association of Suicidology, Santa Fe, NM.

Romero, M., & Wintemute, G. (2002). The epidemiology of firearm suicide in the United States. *Journal of Urban Health: Bulletin of the New York Academy of Medicine, 79* (1), 39-48.

Roy, A. (2003). Characteristics of HIV patients who attempt suicide. *Acta Psychiatrica Scandinavica, 107,* 41-44.

Ryan, C. & Futterman, D. (1998). *Counseling gay and lesbian youth.* New York: Columbia University Press.

Small Arms/ Firearm Education & Research Network [SAFER-Net]. (2005). Retrieved 7/18/05 from http://www.research.ryerson.ca/SAFER-Net/index.html.

Safren, S., & Heimberg, R.(1999). Depression, hopelessness, suicidality, and related factors in sexual minority and heterosexual adolescents. *Journal of Consulting and Clinical Psychology, 67* (6), 859-866.

Satcher, D. (2002). *Surgeon General's Call to Action for Suicide Prevention*. Retrieved Nov. 29, 2002, from http://www.mentalhealth.org/suicideprevention/calltoaction.asp .

Saz, P., & Dewey, M. (2001). Depression, depressive symptoms, and mortality in persons aged 65 and over living in the community: A systematic review of the literature.

Schalkwyk, J., Lazer, C., & Cumming, E. (1979). Another look at status integration and suicide. *Social Forces, 57,* (4), 1063-1080.

Scocco, P., & De Leo, D. (2002). One year prevalence of death thoughts, suicide ideation, and behaviors in an elderly population. *International Journal of Geriatric Psychiatry, 17,* 842-846.

Seligman, M. (1975). *Helplessness: On depression, development, and death.* San Francisco: Freeman.

Shah, R., Uren, Z., Baker, A., & Majeed, A. (2002). Trends in suicide from drug overdose in the elderly in England and Wales, 1993-1999. *Journal of Geriatric Psychiatry, 17,* 416-421.

Shen, X. (Sept. 27, 2002). A closer look at suicide in Indiana. Presentation made to the Indiana Partnership to Prevent Firearm Violence annual meeting: Suicide prevention, a call to action. Indianapolis, IN.

Shenassa, E., Catlin, S., & Buka, S. (2003). Lethality of firearms relative to other suicide methods: A population-based study. *Journal of Epidemiology and Community Health, 57,* (2), 120-125.

Shepard, D. M., & Barraclough, B. M. (1980). Work and suicide: An empirical investigation. *British Journal of Psychiatry, 136,* 469-478.

Sherman, M., Burns, K., Ignelzi, J., Raia, J., Lofton, V., Toland, D., Stinson, B., Tilley, J., & Coon, T. (2001). Firearms risk management in psychiatric care. *Psychiatric Services, 52,* 1057-1061.

Shneidman, E. (1985). *Definition of suicide.* New York: Wiley.

Shneidman, E. (1987). A psychological approach to suicide. In G. R. VandenBos & B. K. Bryant (Eds.), *Cataclysms, crises, and catastrophes: Psychology in action* (pp. 151-183). Washington, D. C.: American Psychological Association.

Shneidman, E. (2001). *Comprehending suicide: Landmarks in 20th century suicidology.* Washington, DC: American Psychological Association..

Skegg, K., Nada-Raja, S., Dickson, N., Paul, P., & Williams, S. (2003). Sexual orientation and self-harm in men and women. *American Journal of Psychiatry, 160,* 541-546.

Sloan, J. H., Rivara, F. P., Reay D. T., Ferris, J. A., & Kellerman, A. L. (1990). Firearm regulations and rates of suicide. A comparison of two metropolitan areas. *New England Journal of Medicine, 322,* 369-373.

Smith, J.C., Mercy, J.A., & Conn, J. M. (1988). Marital status and the risk of suicide. *American Journal of Public Health, 78,* 1978-1980.

Smith, M. D., & Parker, R. N. (1980). Type of homicide and variation in regional rates. *Social Forces, 59,* 136-147.

Snowdon, J., & Baume, P. (2002). A study of older people in Sydney. *International Journal of Geriatric Psychiatry, 17,* 261-269.

Snowdon, J., & Harris, L. (1992). Firearm suicides in Australia. *Medical Journal of Australia, 156,* 79-83.

Spence, D. (1975). The meaning of engagement. *International Journal of Aging and Human Development, 6,* 193-198.

Stack, S. (1978). Suicide: A comparative analysis. *Social Forces, 57,* (2), 644-653.

Stack, S. (1980). The effect of marital dissolution on suicide. *Social Forces, 57,* 644-653.

Stack, S. (1990). Audience receptiveness, the media, and aged suicide, 1968-1980. *Journal of Aging Studies, 4,* 1995-209.

Stafford, M., & Gibbs, J. (1985). A major problem with the theory of status integration and suicide. *Social Forces, 63,* (3), 643-660.

Stafford, M., & Gibbs, J. (1988). Change relation between marital integration and suicide rates. *Social Forces, 66,* (4), 1060-1079.

Starace, F. (1995). Epidemiology of suicide among persons with AIDS. *AIDS Care, 7* (suppl. 2), 5123-5128.

Stedman Jones, S. (2001). *Durkheim Reconsidered*. Cambridge: Polity Press.

Stein, G., & Bonuck, K. (2001). Attitudes on end-of-life care and advance care planning in the lesbian and gay community. *Journal of Palliative Care, 4,* 2, 173-190.

Stillion, J., & McDowell, E. (1996). *Suicide across the lifespan.* Bristol, PA: Taylor & Francis.

Stolzenburg, L., & D'Alessio, S. (2000). Gun availability and violent crime. *Social Forces, 78,* 1461-1482.

Strombeck, R., & Levy, J. A. (1998). Educational strategies and interventions targeting adults age 50 and older for HIV/AIDS prevention. *Research on Aging, 20* (*6*), 912-936.

SYSTAT for DOS: Advanced applications, Version 6 Ed. Evanston, IL: Systat.

Szanto, K., Gildengers, A., Mulsant, B., Brown, G., Alexopoulos, G., & Reynolds, C. (2002). Identification of suicidal ideation and prevention of suicidal behavior in the elderly. *Drugs Aging, 19* (1), 11-24.

Tabachnick, B. G., & Fidell, L. S. (1996). *Using multivariate statistics (3rd ed.)*. New York: Harper Collins.

Tadros, G., & Salib, E. (2000). Age and methods of fatal self harm [FSH]: Is there a link? *International Journal of Geriatric Psychiatry, 15,* 848-852.

Taylor, S. (1982). *Durkheim and the Study of Suicide.* New York: St. Martin's Press.

Thompson, K. (Ed.). (1985). *Readings from Emile Durkheim*. London: Tavistock Publications.

Tondo, L., Hennen, J., & Baldessarini, R. (2001). Lower suicide risk with long-term lithium treatment in major affective illness: A meta-analysis. *Acta Psychiatrica Scandinavica, 104*, 163-172

Trovato, F. (1991). Sex , marital status, and suicide in Canada: 1951-1981.*Sociological Perspectives, 34* (4), 427-445.

Uncapher, H. (2000). Physicians less likely to offer depression therapy to older suicidal patients than to younger ones. *Geriatrics, 55* (4). 82.

Uncapher H., & Arean P. A. (2000). Physicians are less willing to treat suicidal ideation in older patients. *Journal of the American Geriatric Society, 48* (2), 188-92.

United Nations. (2003).Research agenda on ageing for the 21st century. Retrieved on 4/5/03 from http://www.un.org/esa/socdev/ageing/ageraa.htm

United Nations Economic and Social Council [UNESC]. (1997). *Criminal justice reform and strengthening of legal institutions measures to regulate firearms: Report of the Secretary General.* Retrieved on 6/27/05 from http://www.uncjin.org/Documents/6comm/1add1e.pdf

Upanne, M. (2002). Changes in professional conceptions of suicide among psychologists: Using a conceptual model. *Journal of Community and Applied Psychology. 12,* 108-123.

Upson, A., Povey, D., & Gray, A. (2004). Violent crime. In T. Dodd, S. Nicholas, D. Povey, & A. Walker (Eds.), *Home Office statistical bulletin: Crime in England and Wales 2003-2004.* Research, Development, & Statistics Directorate, Communication and Development Unit, Home Office, London: Crown Copyright.

US Census Bureau (2005). *Summary file 3: 2000 census of population and housing technical documentation.* US Department of Commerce, Economics and Statistics Administration. Retrieved June10, 2005 from http://www.census.gov/prod/cen2000/doc/sf3.pdf

US Department of Education. (2005). The state of literacy in America: Estimates at the local, state and national levels. National Adult Literacy Survey. Retrieved on 5/19/05 from http://www.nifl.gov/reders/!intro.htm

US Department of Justice. (2001). *Federal Bureau of Investigation's Crime in the United States: Uniform Crime Reports.* Retrieved on 4/20/04 from http://www.fbi.gov/ucr/ucr.htm#cius

US Department of Justice. (2004). *Federal Bureau of Investigation's Uniform Crime Reporting handbook.* Retrieved on 5/20/05 from http://www.fbi.gov/ucr/handbook/ucrhandbook04.pdf

US Public Health Service, (1999). *The Surgeon General's Call to Action to Prevent Suicide.* US Government Printing Office: Washington, DC.

VandenBos, G. R., & Bryant, B. K. (Eds.), *Cataclysms, crises, and catastrophes: Psychology in action.* Washington, D. C.: American Psychological Association.

Van Wormer, K. (1997). *Social welfare: A world view*. Belmont, CA: Wadsworth.

Vernon, R. F., & Lynch, D. (2000). Social work and the web. Belmont, CA: Brooks Cole.

Vigdor, E. R., & Mercy, J. A. (2003). Disarming batterers: The impact of domestic violence firearm laws. In J. Ludwig, & P. J. Cook, (Eds.). (2003). *Evaluating gun policy: Effects on crime and violence,* (pp. 157-214). Washington, DC: The Brookings Institution.

Waldrop, J., & Stern, S. (2003). *Disability status: Census 200 brief.* US Department of Commerce, Economics and Statistics Administration, US Census Bureau. Washington, DC

Weisman, A. D., & Kastenbaum, R. (1968). *The psychological autopsy: A study of the terminal phase of life.* New York: Behavioral Publications. [Community Mental Health Journal Monograph No.4.]

Wiebe, D. (2003). Homicide and suicide risks associated with firearms in the home: A national case-control study. *Annals of Emergency Medicine, 41,* 6, 771-782.

Wintemute, G. J., Parham, C. A., Beaumont, J. J., Wright, M., & Drake, C. (1999). Mortality among recent purchasers of handguns. *New England Journal of Medicine,* 341, 1583-1589.

Wold, H. (1981). *The fix-point approach to interdependent systems.* Amsterdam: North Holland.

Wold, H. (1985). Partial Least Squares. In S. Kotz & N. L. Johnson, (Eds.), *Encyclopedia of Statistical Sciences,* Vol. 6, pp. 581-591. New York: Wiley.

Wold, H., & Jöreskog, K. (Eds.), (1982). *Systems under indirect observation* (pp. 149-173). New York: Elsevier-North Holland.

Wollman, N., Yoder, B., & Brumbaugh-Smith, J. (1995, 1996, 1997, 1998, 1999, 2000, 2001). The National Index of Violence and Harm, press release, Manchester College, Public Relations Department.

World Health Organization [WHO]. (1996). *Prevention of suicide: guidelines for the formulation and implementation of national strategies*. Geneva: Author.

World Health Organization [WHO]. (2003). Adherence to long-term therapies: Evidence for action. Retrieved on 6/10/03 from http://www.who.int/chronic_conditions/adherencereport/en/

World Health Organization [WHO]. (2005). Suicide prevention and special programmes. Retrieved on 6/16/05 from http://www.who.int/mental_health/prevention/suicide/en/Figures_web0604_table.pdf

Yaniv, G. (2001). Suicide intention and suicide prevention: An economic perspective. *The Journal of Socio-Economics, 30,* 453-468.

Yalom, I. (1980). *Existential psychotherapy.* New York: Basic Books.

Yesavage, A. (2003). *Geriatric Depression Scale*. Retrieved on 4/28/03 from http://www.stanford.edu/~yesavage/GDS.html

Yesavage, A., Brink, T. L., Rose T. L., Lum, O., Huang, V., Adey, M. B., Leirer, V. O. (1983). Development and validation of a geriatric depression screening scale: A preliminary report. *Journal of Psychiatric Research 17:* 37-49.

Yoder, G. (2003). Firearm suicide among older adults: A meta-analysis. (unpublished manuscript).

Zelenetz, P. D. & Epstein, M. E. (1998). HIV in the elderly. *AIDS Patient Care and STDs*. *12* (4), 255-262.

CURRICULUM VITAE

NAME: Greta Yoder Slater

EDUCATION:
Ph.D. Indiana University, Indianapolis, IN; 2005. (G.P.A. 3.9)
M.S.W.; University of Kentucky, Lexington, KY, 1995 (G.P.A. 3.96)
B.S.; Manchester College, N. Manchester, IN, 1992. (G.P.A. 3.2)

LICENSURES/CERTIFICATIONS:
Licensed Clinical Social Worker, 1998-present *(IN # **34003994A**)*
Academy of Certified Social Workers, 1997-present.
Licensed Social Worker, (OH), 1992-1995.

HONORS AND FELLOWSHIPS:

2005	Indiana University Graduate Travel Fellowship
2004	Esprit: Spirit of Inquiry Award, Indiana University School of Social Work
2003-04	Graduate Fellowship in Aging, Indiana University School of Medicine
2003	Indiana University Graduate Travel Fellowship
2003	Graduate Student Organization Educational Enhancement Award, Indiana University
2003	Esprit: Spirit of Inquiry Award, Indiana University School of Social Work
2002-03	Graduate Fellowship in Aging, Indiana University School of Medicine
2002	Indiana University Graduate Travel Fellowship ($800)
1995	Inducted into the National Social Work Honor Society, Alpha Delta Mu, Gamma Epsilon.

PROFESSIONAL ORGANIZATION MEMBERSHIPS:

2005-present	American Association of University Professors (AAUP)
2004-present	Association for Gerontology Education in Social Work (AGE-SW)
2003-present	Society for Social Work and Research (SSWR)
2003-present	American Association of Suicidology (AAS)
2003-present	Council on Social Work Education (CSWE)
2002-2003	Association of Baccalaureate Social Work Program Directors (BPD)
2002-present	Gerontological Society of America (GSA)
1995-present	National Association of Social Workers (IN Chapter)
1995-2001	Midwest Regional Network for Intervention with Sexual Offenders (MRNISO)
1993-1995	National Association of Social Workers (OH Chapter)

FIELDS OF SPECIALIZATION/INTEREST:

Socio-cultural components of late-life suicide
Assessment of gerontological and social work education
Clinical practice with adolescents & women
Abuse and neglect across the lifespan

RESEARCH EXPERIENCE:

Evaluation Coordinator and Research Assistant for Margaret Adamek, Ph.D., *Geriatric Enrichment in Social Work Education: Developing Aging-Savvy Social Workers: A Teaching and Learning Clearinghouse*, Indiana University, Indianapolis, IN, Aug. 2002-2004. Grant funded by John A. Hartford Foundation, Aug. 2001-2004. Instrument design, program effectiveness data collection, planning and coordination of faculty training in aging issues, planning and coordination of CEU event, website module development for online courses/gerontology certificate program, statistical analysis using SPSS.

Dissertation grant proposal author, *Firearm Suicide among Older Adults: A Sociological Autopsy.* John A. Hartford Foundation, February, 2004. (unfunded)

Grant proposal co-author with Margaret Adamek, Ph.D., *Firearm Lethality Assessment: Development and Validation of a Brief Screening Tool*, American Foundation for Suicide Prevention (AFSP) January, 2004. (unfunded)

Field Liaison Coordinator and Research Assistant for Margaret Adamek, Ph.D., *Examining the Role of Doctoral Students in Enhancing Social Work Field Education*, Indianapolis, IN, April 2003-present. Grant funded by IUPUI Program Review and Assessment Committee (PRAC), Jan. 2003-April 2004.

Research Assistant for Cathy Pike, Ph.D., *Baccalaureate Education Assessment Package (BEAP) Project* (*N*= over 19,000), and *Social Work Education Assessment Initiative*, Feb. 2002-2004. Literature review, statistical analysis using SPSS, and reporting results. Beta-testing of Curriculum Analyzer©.

Research Assistant for Bill Barton, Ph.D. and Gail Folaron, Ph.D. *Evaluating the Division of Family and Children's Customer Services*, Indiana University School of Social Work, Indianapolis, IN, March 2002-August 2002. Grant funded by Indiana Division of Family and Children's Services, 2001-2003. Transcript data coding and analysis, instrument development, data entry, and statistical analysis using SPSS.

Grant proposal co-author with Margaret Adamek, Ph.D., *The Language of Health: Primary Care Physician's Communication with Geriatric Patients*, Pfizer Health Literacy Initiative, January, 2002. (unfunded)

EMPLOYMENT:

2005-present	Assistant Professor, Ball State University College of Sciences and Humanities, Department of Social Work, Muncie, IN.
2004-2005	Contract Faculty, Ball State University College of Sciences and Humanities, Department of Social Work, Muncie, IN.
2002-2004	Research Assistant, Indiana University School of Social Work, Indianapolis, IN.
2000-2002	Clinical Social Worker, Parkview Behavioral Health Inc., Huntington, IN.
1995-2000	Clinical Social Worker, Wabash County Adolescent Offender Treatment Program Coordinator, Family Service Society, Inc. Wabash and Marion, IN.
1994-1995	Prevention Specialist, NORCEN (North Central) Behavioral Health Systems, Inc. Cincinnati, OH.

PUBLICATIONS:

Adamek, M. E. & Slater, G. Y. (In Press). Evidence-based psychosocial interventions with older adults with anxiety and depression. In N. Kropf & S. Cummings (Eds.). *Evidence-based psychosocial treatments for older adults.* New York: Haworth Press.

Adamek, M. E. & Slater, G. Y. (In Press). Social work with older adults at-risk of suicide. In B. Berkman & S. D'Ambruoso (Eds.) *The Oxford Handbook of Social Work in Aging.* Oxford, UK: Oxford University Press.

RESEARCH PRESENTATIONS:

Slater, G. Y. & Adamek, M. (2006). *Exploration into the Structure of Suicide: A Sociological Autopsy.* Accepted for presentation, Council on Social Work Education's 51st Annual Program Meeting, February 16-19, Chicago, IL.

Slater, G. Y. & Adamek, M. (2006). *The Covariance Structure of Elder Firearm Suicide: A Sociological Autopsy.* Accepted for presentation, 3rd Annual National Gerontological Social Work Conference, February 16-19, Chicago, IL.

Adamek, M. E. & Slater, G. Y. (2005). *Evidence-based psychosocial interventions with older adults with anxiety and depression.* Accepted for presentation 58th Annual Meeting of the Gerontological Society of America, November 20, Orlando, FL.

Slater, G. Y. & Adamek, M. (2005). *DO Ask, DO Tell: Best Practices for Managing Elder Suicide Emergencies.* Research Presentation, Indiana University School of Social Work Spring Research Symposium, April 22, Indianapolis, IN.

Slater, G. Y. & Adamek, M. (2004). *Elder Suicide Emergencies: The Missing Piece.* Research Presentation, 57th Annual Meeting of the Gerontological Society of America, November 21, Washington, DC.

Yoder, G. (2004). *The Impact of Political Climate and State Legislation on Suicide: Development and Testing of the Gun Access Index.* Research Presentation, Indiana University School of Social Work Spring Research Symposium, April 23, Indianapolis, IN.

Yoder, G. (2004). *Firearm Suicide: Preliminary Results of the Sociological Autopsy Method,* Research Presentation, 8th Annual Meeting of the Society for Social Work and Research (SSWR), January 15, New Orleans, LA.

Yoder, G. (2003). *Firearm Suicide among Older Adults: A Sociological Autopsy,* Research Presentation, 56th Annual Meeting of the Gerontological Society of America, November 23, San Diego, CA.

Yoder, G. (2003). *Developing Aging-Savvy Social Workers: A Teaching and Learning Clearinghouse.* Research Presentation, Indiana Association of Social Work Educators Annual Conference, April 4, Indianapolis, IN.

Pike, C., Cournoyer, B., Queiro-Tajalli, I. & Yoder, G. (2003). *Using Multiple Methods and Standardized Instruments in Assessment of Baccalaureate Education,* Research Presentation, Council on Social Work Education's 49th Annual Program Meeting co-sponsored by the 1st National Gerontological Social Work Conference, March, 2, Atlanta, GA.

Yoder, G. (2002). *Socio-historic Rhetorical Analysis of Feminism in Social Work Writing,* Research Presentation, International Gender and Language Conference, April 13, Lancaster University, Lancaster, UK.

Yoder, G. (2002). *Medical Identity, Sociolinguistics, and Social Work: A 'Community of Practice' Approach,* Research Presentation, Indiana University School of Social Work Spring Research Symposium, April 11, Indiana University, Indianapolis, IN.

PROFESSIONAL WORKSHOPS PRESENTED:

Yoder, G. & Adamek, M. (2004). *Suicide Lethality Assessment: The Missing Piece.* Indiana University Alumni Association's Annual Mental Health Conference, Indianapolis, IN, March 5, 2004.

Hanson, V., Yoder, G. & Adamek, M. (2004). *Sex, Dating, and Intimacy in Late Life: Implications for Education and Practice.* Council on Social Work Education's 50th Annual Program Meeting co-sponsored by the 2nd National Gerontological Social Work Conference, Feb. 29, Anaheim, CA. (Refereed).

Adamek M. & Yoder, G. (2003). *Geriatric Suicide,* with Margaret Adamek, IUSSW Field Instructors CEU seminar, Aug. 11, 2003.

Yoder, G. (1996). *The Seven Habits of Highly Effective People,* 4 sessions of in-service training for therapists and staff at Family Service Society, Inc., Marion, IN on June 3, July 1, Aug. 5, Sept. 2.

SPECIAL TRAINING:

Preparing Future Faculty Program, Office for Professional Development, Indiana University, Indianapolis, IN, certificate completed June, 2004.

Assessing Psychopathy: Clinical and Forensic Applications of the Hare Psychopathy Checklist-Revised (PCL-R), 1999.

University of Cincinnati, College of Medicine, Department of Psychiatry, Clinical Social Work Field Placement, 1994-1995.

COMMUNITY SERVICE:

2004-present	Member, Indiana Suicide Coalition, Indianapolis, IN
2002-present	Board Member, Hoosiers Concerned about Gun Violence, Indianapolis, IN.
2002-present	Member, Suicide Prevention Coalition, Indiana Partnership to Prevent Firearm Violence, Indianapolis, IN.
2003-present	Member, Peace and Justice Committee, First Mennonite Church, Indianapolis, IN.
2003-present	Member, Peace Planning Committee, Historic Peace Churches of Indianapolis (Mennonite, Church of the Brethren, & Quaker), Indianapolis, IN.
1996-present	Board Member, Manchester College Social Work Program Advisory Council, North Manchester, IN.
2003-2004	Chair, Peace and Justice Committee, First Mennonite Church, Indianapolis, IN.
2002-2004	Ph.D. Committee, Student Representative, Indiana University School of Social Work, Indianapolis, IN

2002-2003	Chair-Elect, Peace and Justice Committee, First Mennonite Church, Indianapolis, IN.
2001-2002	Member, Hoosiers Concerned About Gun Violence, Indianapolis, IN.
1995-2000	Member, Wabash County Sexual Abuse Task Force, IN.

PROFESSIONAL WORKSHOPS ATTENDED:

Nov. 19-23, 2004	57th Annual Meeting of the Gerontological Society of America, *Promoting the Health of an Aging Population*, Washington, DC.
May 4, 2004	*Preparing Future Faculty Program Capstone*, Preparing Future Faculty Program, Indiana University, Indianapolis, IN.
April 28, 2004	*The Life-cycle of the Intramural Grant*, Preparing Future Faculty Program, Indiana University, Indianapolis, IN
April 16, 2004	*Gender in the Classroom*, Preparing Future Faculty Program, Indiana University, Indianapolis, IN.
April 15, 2004	*The Next Fifty Years: The Business of Aging*, Kirkpatrick Memorial Lecture, Ball State University, Muncie, IN,
April 7, 2004	*Civic Engagement as Scholarly Activity*, Preparing Future Faculty Program, Indiana University, Indianapolis, IN.
March 23, 2004	*Mid-Career Change Workshop*, Preparing Future Faculty Program, Indiana University, Indianapolis, IN.
March 10, 2004	*Creating Interactive Online Content*, Preparing Future Faculty Program, Indiana University, Indianapolis, IN.
March 5, 2004	*Motivating Students*, Preparing Future Faculty Program, Indiana University, Indianapolis, IN.
March 3, 2004	Online Activities: Advancing Learning through Student Interaction with Course Content, Preparing Future Faculty Program, Indiana University, Indianapolis, IN.
Feb. 27- Mar. 2, 2004	*Council on Social Work Education's 50th Annual Program Meeting co-sponsored by the 2nd National Gerontological Social Work Conference*, Anaheim, CA.
Feb. 23, 2004	*Faculty Portfolio Part II: Putting it all Together*, Preparing Future Faculty, Indiana University, Indianapolis, IN.
Feb. 9, 2004	*Faculty Portfolio Part I: Writing Your Personal Statement*, Preparing Future Faculty, Indiana University, Indianapolis, IN.
Feb. 5, 2004	*Academic Misconduct*, Preparing Future Faculty Program, Indiana University, Indianapolis, IN.
Jan. 12, 2003	*Introduction to the Intramural Grants Program*, Preparing Future Faculty Program, Indiana University, Indianapolis, IN.
Nov. 21-25, 2003	56th Annual Meeting of the Gerontological Society of America, *Our Future Selves*, San Diego, CA.
Oct. 3, 2003	Indiana Partnership to Prevent Firearm Violence, Annual Meeting, *Suicide Prevention: Best Practices*, Indianapolis, IN.
April 24-26, 2003	36th Annual Conference of the American Association of Suicidology, Santa Fe, NM.

April 4, 2003	Indiana Association of Social Work Educators Annual Conference (IASWE), co-sponsored by GeroRich project, Indiana University School of Social Work, and IASWE. Indianapolis, IN.
Feb. 27-Mar. 2, 2003	49th Annual Program Meeting of the Council on Social Work Education, co-sponsored by the 1st National Gerontological Social Work Conference, Atlanta, GA.
Nov. 22-26, 2002	55th Annual Meeting of the Gerontological Society of America, *Relationships in a Changing World, From Aging Cells to Aging Society*, Boston, MA.
October 23-27, 2002	20th Annual Association of Baccalaureate Program Directors Annual Meeting (BPD), *Preparing Social Workers for an Aging Society*, Pittsburgh, PA.
September 27, 2002	Indiana Partnership to Prevent Firearm Violence, Annual Meeting, *Suicide Prevention: Best Practices*, Indianapolis, IN.
April 13-15, 2002	International Gender and Language Conference (IGALA2), Lancaster University, Lancaster, UK.
Sept. 30, 1999	*Exploring the Spiritual Dimensions of Death, Grief and Mourning*, Dr. Alan Wolfelt, Indianapolis, IN.
Sept. 20-21, 1999	*Assessing Psychopathology: Clinical and Forensic Applications of the Hare Psychopathy Checklist-Revised*, Dr. Robert Hare, Orlando, FL.
August 17, 1999	*Personality Disorders in Social Work and Healthcare*, Dr. Gary Lester, Indianapolis, IN.
May 7, 1999	*Working with Sex Offenders*, Dr. Anna Salter, Indianapolis, IN
Nov. 13-14, 1998	*Strategies for Therapeutic Success: My 20 Most Effective Techniques*, Dr. David Burns, Indianapolis, IN.
Nov. 6, 1998	*Collaborative Efforts in the Effective Intervention with Sexual Abuse Cases*, Dr. Charlene Steen, Indianapolis, IN.
March 6, 1998	*Play Therapy with Sexually Abused Children*, National Association of Social Workers, Indianapolis, IN.
June 16, 1997	*Fine Tuning Your Approach to Couples Therapy*, NASW, Indianapolis, IN.
May 16, 1997	Conference on Adolescent Sexual Offender Treatment, Midwest Regional Network for Interventions with Sexual Offenders, Indianapolis, IN.
October 11, 1996	*Therapeutic Assessments of Alleged Abuse During Custody Disputes*, Dr. Eleana Gil, Ft. Wayne, IN.