Available online at www.sciencedirect.com

ScienceDirect

Procedia Engineering 145 (2016) 1004 – 1012

Procedia Engineering

www.elsevier.com/locate/procedia

International Conference on Sustainable Design, Engineering and Construction

Waste Water Force Main Pipe Construction Alternatives to Protect Existing Foundations in the City of Chandler: Case Study

Jonghoon Kim[a]*, Andrew Baird[b]*, Dan D. Koo[c], Samuel T. Ariaratnam[d] and Wai K. O. Chong[d]

[a]*Oklahoma State University, 485 Cordell South, Stillwater, OK 74078, USA*
[b]*AZTEC Engineering, 4561 E. McDowell Rd,., Phoenix, AZ 85248, USA*
[c]*IUPUI, 799 W. Michigan St., Indianapolis, IN, 46202, USA*
[d]*Arizona State University, 660 S. College Ave., Tempe, AZ 85287, USA*

Abstract

To provide additional wastewater capacity and redundancy in South Chandler, Arizona, a new 28" High Density Polyethylene (HDPE) force main was installed from the upsized Kyrene Lift Station three miles east to tie into an existing 66" transmission sewer line. The force main was installed under the State Route Loop 202 (SR 202L) freeway through existing 48" steel casings constructed ten years prior. Additionally, the force main was constructed through a narrow Arizona Department of Transportation (ADOT) corridor, which required clearance from existing utilities, including overhead 69kV power poles. Two locations required innovative solutions to both access the existing sleeves and cross the transmission power pole foundations: 1) crossing of the 69kV power pole required detailed slope stability analysis and location specific trench backfilling; and 2) access to the existing 48" was within 15 feet of an existing ADOT sound wall. Various alternatives for access were analyzed in this paper including temporary shoring, sheet pile installation, and full wall replacement and reconstructing on drilled shafts. Based on the objectives above, the existing power pole does not have sufficient embedment for maximum design loads but is stable with reduced load factors and lower operation wind forces. Also, for construction issue with the existing ADOT sound wall, the temporary shoring and sheet piles used due to the geotechnical conditions and construction costs.

© 2016 The Authors. Published by Elsevier Ltd. This is an open access article under the CC BY-NC-ND license (http://creativecommons.org/licenses/by-nc-nd/4.0/).
Peer-review under responsibility of the organizing committee of ICSDEC 2016

* Corresponding author. Tel.: 1-602-620-3785
E-mail address: abaird@aztec.us

1877-7058 © 2016 The Authors. Published by Elsevier Ltd. This is an open access article under the CC BY-NC-ND license (http://creativecommons.org/licenses/by-nc-nd/4.0/).
Peer-review under responsibility of the organizing committee of ICSDEC 2016
doi:10.1016/j.proeng.2016.04.130

Keywords: Noise Wall, Foundation, Shoring, Slope Stablity, Forcemain Pipe

1. Introduction

1.1. Project Background

The original alignment for what was to be a reclaimed waterline was coordinated between the City of Chandler and the Arizona Department of Transportation (ADOT) during the design of the State Route Loop 202 (SR 202L) and the State Route Loop 101 (SR 101L) Traffic Interchange in 2002/2003. Through two Inter-government Agreements (IGAs) between ADOT and the City, ADOT installed 48” steel casings at pre-determined locations. At that time, it was thought that the carrier pipeline would be used as a reclaimed waterline to transport effluent east from the Lone Butte Wastewater Reclamation Facility (Lone Butte WRF) along the south side of the SR 202L from Kyrene Road to east of Price Road.

In 2000, ADOT constructed a 24-inch ductile iron pipe (DIP) waterline parallel to and along the north edge of the Santan Channel at an approximately depth of 7-feet to pipe invert. In 2004, ADOT constructed a 48-inch Steel Pipe Sleeve perpendicular to SR 202L and a sound wall 305-feet north of the SR 202L Median Centerline that parallels the Santan Channel. As-Built plans showed the sleeve at a depth of approximately 35-feet to the invert and 16-feet north of the ADOT Sound Wall. The portion of the pipe sleeve under the Santan Channel was installed using horizontal auger boring. Pothole and survey information revealed a concrete layer approximately 20-feet below grade in the assumed location of the northern limits of the casing. As-Built plans indicated that the sound wall was approximately 18-feet tall masonry and supported by a continuous pile cap founded on 18-inch diameter by 14-feet drilled shafts spaced at 10-feet on center.

In 2007, the City hired consultants to study the wastewater management of West Chandler. As a result of this study, the City opted to increase the capacity of the Airport Wastewater Reclamation Facility (Airport WRF) and to use this corridor and existing steel casings to pump wastewater either from the Kyrene Lift Station (Kyrene LS) or a new completely new lift station to the Airport WRF via the existing 66-inch interceptor sewer and Ocotillo Water Reclamation Facility (Ocotillo WRF) lift station. The City already had an existing conveyance system in place to water from Ocotillo WRF to the Airport WRF.

After completion of the study in 2007, the project moved into final design. The Scope of the final design included a 28”/24” HDPE force main constructed approximately 6-feet to 9-feet deep except at the existing 48” steel casings which varied from 35’ deep at the ADOT sound wall to 11’ deep at the local cross roads. This force main was constructed from the upsized Kyrene Lift Station, located on the northeast corner of SR202 and Kyrene Road, south under SR202 through on of the previously installed casings then east to Price Road where it tied into an existing 66” transmission main. Accessing both the existing sleeves and navigating the narrow corridor to place the force main would potential impact the foundations of the 69kV power poles and the ADOT sound wall adjacent to the Kyrene Lift Station, potentially reducing the foundation capacity of each. **Fig. 1** shows the overall Project Features Map in Chandler, Arizona.

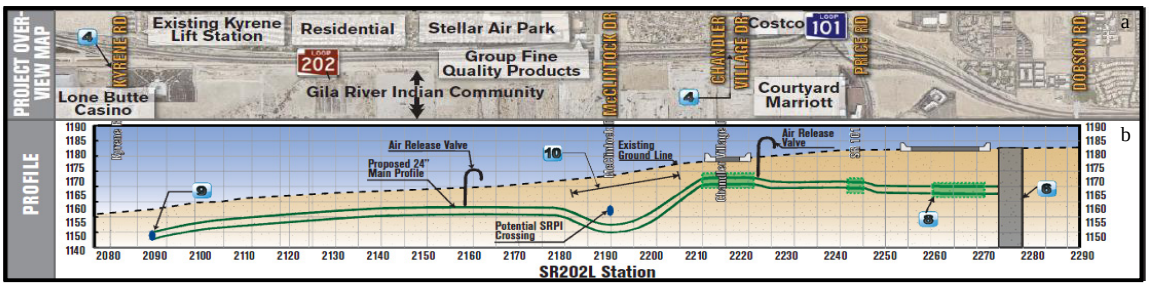

Fig. 1. Overall Project Features Map (a) Plan view of the entire project; (b) Schematic New 28-inch force main profile

1.2. Project Objectives

The objectives of this project were: 1) to explore different alternatives to tie into the existing sleeve crossing SR202 and 2) to evaluate the impact of the proposed force main construction on the stability of the adjacent Salt River Project (SRP) power transmission line pole foundation.

2. Investigation of Field and Site Conditions

The proposed force main alignment utilized existing steel casings at the Santan Freeway, McClintock Road, and Chandler Village Drive, through a narrow landscaped area west of Price Road and at Price Road. The landscaped area contained trees, shrubs, ADOT utilities, overhead 69kV power lines including ADOT irrigation systems and lighting, SRP irrigation mains, gas and water lines.

The project site in Chandler, which is in Southeastern Arizona and elevations of this site, ranges from 1,100 to 1,700-ft with less than 1% slope [1]. Soil in this area is composed of Vecont clay, Mohall sandy loam and Laveen clay loam and it is mapped as moderate permeability in this area [2]. In order to investigate subsurface conditions, the project sites were explored by drilling sixteen test borings to depths of 25.3 to 35.3-feet at the locations. The test borings were drilled with a CME 55 drill rig using 8-inch diameter, hollow-stem auger. The test boring locations were determined in the field by the filed technician based on the preliminary alignment of the force main. During the field exploration representative undisturbed and disturbed samples were obtained, the filed explorations logged and soils field-classified by the field technician who also directed the drill crew. Relatively undisturbed samples of the subsoil were obtained by driving a 3-inch diameter, ring-lined, open-end sampler into the soil with a 140-pound hammer dropping 30-inch.

2.1. Field Condition: Laboratory Analysis and Subsurface Conditions

Representative samples obtained during the field explorations were subjected to the following tests in the laboratory. **Table 1** presents sample tests performed in a laboratory.

Table 1. Sample Tests Performed in a Laboratory

Test Type	Sample Type	Number of Samples Tested
Direct Shear	Undisturbed	17
Sieve Analysis and Atterberg Limits	Representative	33
Maximum Density- Optimum Moisture Determination	Representative	6
pH/Min. Resistivity	Representative	6
Moisture Content/ Dry Density	Undisturbed	97
Soluble Salts, Sulfates, Chloride	Representative	6

Generally, the near surface soils encountered in the test borings and extending for the full depth of exploration (25.3 to 35.3-feet) were variable both in depth within each given test boring and between test borings. The near surface soils (typically less than 10-feet in depth) consisted of mixed deposits of silty to clayey sand, sandy clay/clayey sand and silty sand. These deposits had no to medium plasticity and contained a trace to some gravel and light cementation. The underlying mixed deposits consisted of silty to clayey gravelly sand, clayey gravelly sand, clayey gravelly sand, silty gravelly sand and clayey sand containing some to with gravel. The lower deposits were moderately cemented and moisture contents were described as nearly dry to moist. No groundwater was observed in the test borings during the field exploration.

2.2. SRP Transmission Pole Description

The existing SRP transmission pole was located within a SRP easement along the south boundary of the Santan Freeway (SR 202L). The south border of the corridor is bound by vacant land that is a part of the Gila River Indian Community (GRIC). Directly north of the SRP easement is the transition ramp from SR 202L to SR 101L. It was conveyed that a SRP 48-inch irrigation line extending from east to west was located approximately 11.5-feet north of the SRP 69kV overhead transmission line. A summary of the existing SRP pole and its foundation information provided by SRP Transmission Line Design Standard is presented in **Table 2** and the load cases analysed shown in **Table 3**. The load cases analysed for the SRP pole were NESC light extreme wind, temporary and short-term cases.

Table 2. Summary of Pole and Foundation Information

SRP Pole No.	Foundation		
	Embedment Depth (ft)	Average Embedment Dia. (in)	Pole Height Above Ground (ft)
69	9.0	24.2	66

Table 3. Pole Load Cases

Pole #69	Shear (k)	Moment (k-ft)
NESC Light	7.97	416.2
Extreme Wind	6.48	326.9
Temporary (2 week window)	3.38	174.6
Short Term (48 hour window)	1.07	54.4

3. Findings and Analysis: Construction Alternatives at the ADOT sound wall and Slope Stability Analysis at SRP Transmission Pole

3.1. Construction Alternatives at the ADOT Sound Wall

A mandate of the project was to protect or replace the existing sound wall prior to the start of force main construction. Three alternatives were proposed to expose the existing 48-inch sleeve and evaluated based on the construction costs and soil material properties. Alternative 1 made use of temporary shoring around the north end of the casing to eliminate impacts to existing facilities and minimizes excavation width to access the deep casing. Alternative 2 used sheet piles just north of the wall with excavation extending north at a standard 1:1 slope. This protected existing facilities and involved excavating soils north of Wall SW1 while preserving the soil supporting the wall and drilled shafts. This also enabled for additional excavation north should the casing not be in the correct location per the as-built drawings. Alternative 3 requires removal and replacement of Wall SW1, the 24-inch waterline and the Santan Channel, and maximizes excavation. **Fig. 2** illustrates the 28-inch force main project and three construction alternatives to find the existing casing are shown in **Fig. 3.**

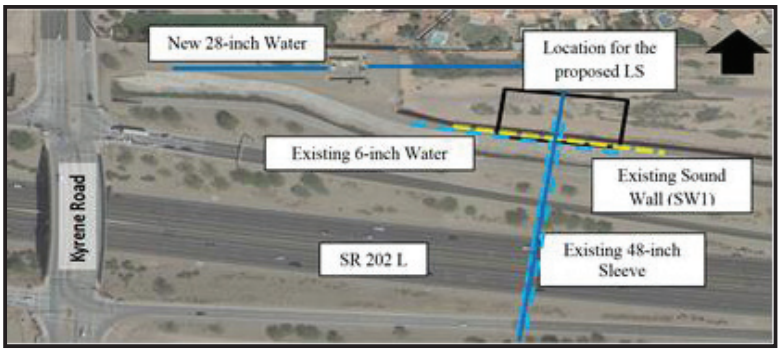

Fig. 2. Schematic drawing of 28-inch Force main project

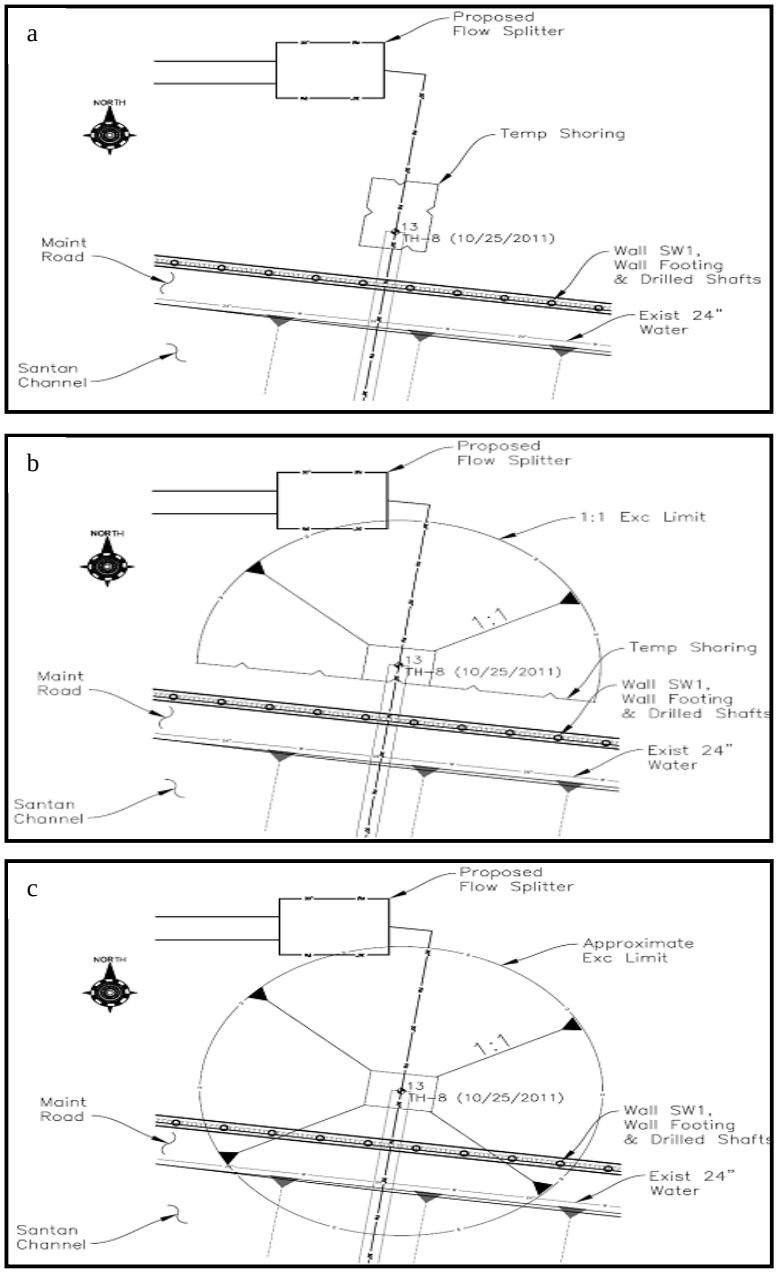

Fig. 3. Design Plan (a) Temporary Shoring; (b) Drilled Shaft Foundation; (c) Removal/Replacement of Sound Wall

3.1.1. Comparison of Construction Costs

The estimated cost of each alternative is shown in **Table 4** with the detailed calculation in **Appendix A.** These costs are based on approximate quantities for items of work (i.e. excavation, backfill, shoring, etc.) and estimated

unit costs, which assumed $15/cy for excavation and $25/cy for backfill from RS Means Residential Cost Data 2012 [3], for each item of work. Based on the costs and minimizing impacts to the existing facilities, Alternative 1 (Temporary Shoring) was anticipated to be the most likely alternative utilized by the contractor to expose the north end of the existing 48-inch pipe sleeve

Table 4. Construction Costs for Alternatives

Alternative No.	Estimated Cost (USD)
Alternative 1 (Temporary Shoring)	$110,000
Alternative 2 Soil Nail Wall or Sheet Piles	$135,000
Alternative 3 (Removal and Replacement of Existing Sound Wall)	$170,000

3.2. SRP Pole Stability Analysis

The pole foundation was analysed based on application of lateral load accompanied by the potential loss of lateral resistance resulting from an adjacent excavation. The temporary utility trench excavation creates a temporary loss of support to the depth of the work. A summary of the literature for excavations adjacent to laterally loaded shafts indicated that excavations anywhere from 3-feet to 5-feet foundation diameters away reduce maximum lateral foundation capacity (depending upon soil and foundation parameters) [4]. Per Maricopa Association of Governments (MAG) Uniform Standard Specifications and Details for Public Works Construction, the minimum trench width for 28-inch HDPE should be 8.5-inch at spring-line on each side of pipe [5].

3.2.1. Evaluation of SRP Pole adjacent to Temporary Trench Excavation

The existing SRP pole was evaluated and the lateral pressures, shear, and ground line moments were calculated for each load case. The acceptable top of foundation movement within maximum performance limits is noted in **Table 5.**

Table 5. Movement within Maximum Performance Limits

Movement Criteria	Value
Max. Deflection	4% of pier diameter
Max. Rotation	1 degree
Non-Recoverable Deflection	2% of pier diameter
Non-Recoverable Rotation	0.5 degree

According to previous studies, lateral forces are assumed to transmit to the excavation face through semi-infinite half space (Westergaard distribution) with kickout loads modelled as square footings and surface rotation loads modelled as a blend of continuous and square footings for the utility trench excavation [6]. Lateral loading on the subgrade from the pole foundations is analyzed assuming a linear load distribution for both kickout and surface soil pressures resisting the rotating pole in static balance.

The maximum distance of the influence of average lateral pressure applied from the face of the pole into the subgrade soils was determined for each of the four load cases. Lateral pressures that extend into the excavation are expected to impact pole performance. Analysis of the Long Term Case for the pole indicated that the influence of average lateral pressure extended into the proposed excavation and could impact pole performance. As a result, the Temporary Case was analyzed for the pole. Analysis of the Temporary Case indicated that the influence of average lateral pressure does not extend into the proposed excavation. It should be noted that the Short Term Load case was not analyzed due to the fact that the Temporary Case was deemed acceptable. The cross-section view of the pole and the proposed excavation is shown in **Fig. 4**.

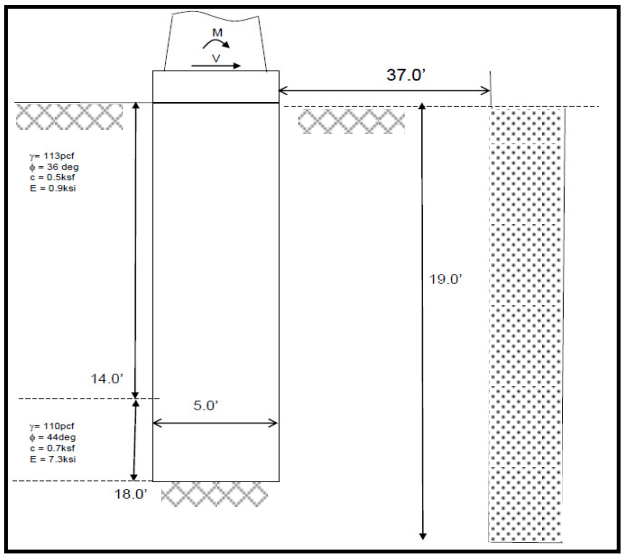

Fig. 4. Cross Section View of the SRP Pole and the Proposed Excavation

4. Conclusions and Recommendations

Two major construction issues were noted during the design that could potential impact both sound wall foundations and SRP transmission pole foundations. Construction alternatives such as temporary shoring, soil nail wall/sheet piles and removal and replacement were evaluated based on the geotechnical conditions and construction costs. The temporary shoring and soil nail wall/sheet piles could be used for this project solely based on geotechnical conditions; however, the temporary shoring was deemed the cheaper method to expose the existing casing but did not offer flexibility in construction should the end of the casing not be at the exact location shown on the as-built drawings.

Slope Stability at the SRP transmission lines confirms long-term excavation exceeds the allowable performance criteria for the existing SRP Pole. This pole does not have adequate embedment for maximum design loads, but is stable with reduced load factors and lower operating wind forces. The analysis for the temporary case indicates the proposed excavation can be used for the pole. The temporary conditions are described as follows:

Trenches within 10 feet of the pole should be backfilled with native or engineered fill soils compacted to a minimum of 95% of maximum Standard Proctor density at or within 3% of optimum moisture [7]. In lieu of compacted backfill, a minimum ½-sack cement controlled low strength material (CLSM) in accordance with MAG 728 may be used. Water settling is not allowed.

Acknowledgements

This project was completed through the City of Chandler Municipal Utilities (Project Number WW1414.401) and located within casings install by ADOT within ADOT Right-of-Way. The geotechnical report and existing SRP pole information were provided by Ricker, Atkinson, McBee, Morman (RAMM) and Associates, Inc and SRP. The authors express appreciation to John Knudson, Kim Neill, Joshua Plumb and Russ Slotnick with the City of Chandler and Tim Wolfe and Steve Beasely at ADOT. The authors also express appreciation to Rob Lemke (CEO) and Curt Slagell (Vice President) at AZTEC engineering, which is prime design company for this project, for authorization to use the project.

Appendix A: Alternative Construction Cost Estimates

The calculations for the construction cost estimates (using 2012 MathCAD) per each alternative are shown for the following:

A.1. Alternative 1 (Temporary Shoring):

Excavation $Exc_{Vol} := 180cy$

Backfill $Bkfl_{Vol} := Exc_{Vol} = 180.00 \cdot cy$

Costs from TSR and Hunter for the "Slide Rail Shoring System"

Shoring Rental $Shoring_{TSR} := 12400dollar$

Personnel $Personnel_{TSR} := 22300dollar$

Shoring Delivery $Delivery_{TSR} := 2100dollar$

Shoring Return $Return_{TSR} := 2100dollar$

Shoring Install $Shoring_{Install} := 60000dollar$

$$Cost_3 := Exc_{Vol} \cdot \left(15 \frac{dollar}{cy}\right) \ldots = 106100.00 \cdot dollar + Bkfl_{Vol} \cdot \left(25 \frac{dollar}{cy}\right) \ldots + \left(\begin{array}{l} Shoring_{TSR} \ldots \\ + Personnel_{TSR} \ldots \\ + Delivery_{TSR} \ldots \\ + Return_{TSR} \ldots \\ + Shoring_{Install} \end{array}\right)$$

A.2. Alternative 2 (Drilled Shaft):

Shoring (Soil Nail) $Area_{Shoring} := (14 \cdot ft) \cdot (34.5 \cdot ft) + (83 \cdot ft - 14 \cdot ft) \cdot \left(\frac{34.5 \cdot ft}{2}\right) = 1673.25 \cdot sf$

North Excavation $Exc_{Vol\_1} := \frac{Exc_{Vol}}{2} + Area_{Shoring} \cdot (5ft) = 1204.86 \cdot cy$

North Backfill $Bkfl_{Vol\_1} := Exc_{Vol\_1} = 1204.86 \cdot cy$

$$Cost_1 := Area_{Shoring} \cdot \left(50 \frac{dollar}{sf}\right) \ldots = 131856.94 \cdot dollar + Exc_{Vol\_1} \cdot \left(15 \frac{dollar}{cy}\right) \ldots + Bkfl_{Vol\_1} \cdot \left(25 \frac{dollar}{cy}\right)$$

Alternative 3 (Excavation):

Sound Wall $\quad Area_{SndWall} := (18 \cdot ft) \cdot (4 \cdot 24 \cdot ft) = 1728.00 \cdot sf$

18" diam. Drilled Shaft $\quad Length_{DS} := \left(3 \frac{shaft}{panel}\right)(4 panel) \cdot \left(\frac{14 ft}{shaft}\right) = 168.00\ ft$

Excavation $\quad Exc_{Vol} = 1790.00 \cdot cy$

Backfill $\quad Bkfl_{Vol} := Exc_{Vol} = 1790.00 \cdot cy$

$$Cost_2 := Area_{SndWall} \cdot \left[(10 + 25) \frac{dollar}{ft^2}\right] \ldots = 165680.00 \cdot dollar$$
$$+ Length_{DS} \cdot \left(200 \frac{dollar}{ft}\right) \ldots$$
$$+ Exc_{Vol} \cdot \left(15 \frac{dollar}{cy}\right) \ldots$$
$$+ Bkfl_{Vol} \cdot \left(25 \frac{dollar}{cy}\right)$$

References

[1] Richard S.M., Reynolds, S.J., Spencer J.E., Pearthree P.A. (2000). Geologic map of Arizona: Arizona Geological Survey Map M-35, 1 sheet, scale 1:1000,000. The Arizona Geological Survey, Tucson, AZ.

[2] Adams, E. D. (1974). Soil survey, eastern Maricopa and northern Pinal Counties area, U.S. Government Printing Office, Washington, DC.

[3] Means, R.S. (2012), Building Construction Cost Data, Kingston, MA: R.S. Means Company, Inc

[4] Mirzoyan A.D., (2007), Lateral resistance of piles at the crest, Master of Science Thesis, Brigham Young University, Provo, UT

[5] Maricopa Association Government (2012), "Uniform Standard Specifications and Details for Public Works Construction- Section 601.2.2"

[6] Stanic, B. (1984),"Influence of Drainage Trenchless on Slope Stability", J. Geotech. Engrg., 110(11), 1624-1636.

[7] OSHA (1999), "Technical Manual -Section V, Chapter 2."
https://www.osha.gov/dts/osta/otm/otm_v/otm_v_2.html